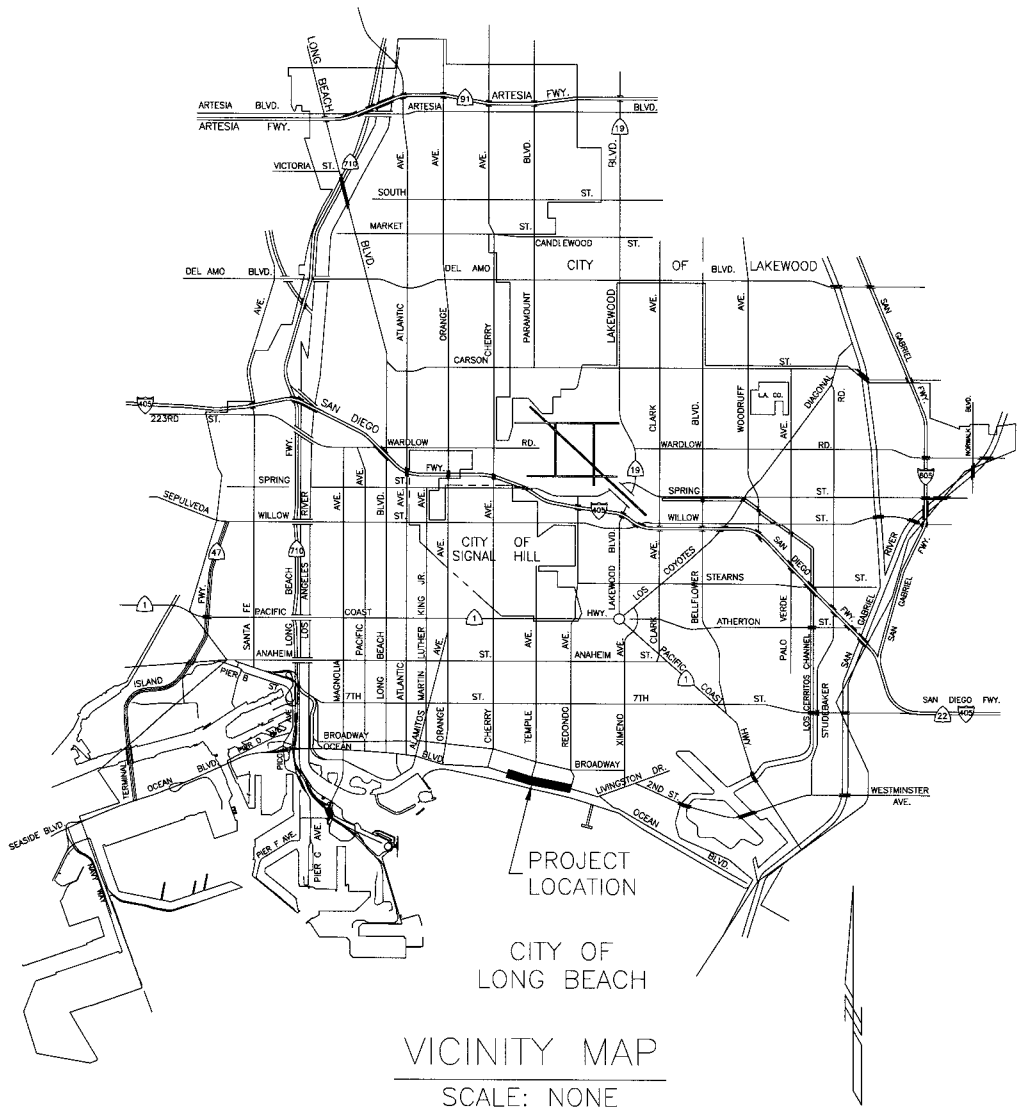

CITY OF LONG BEACH

VICINITY MAP

SCALE: NONE

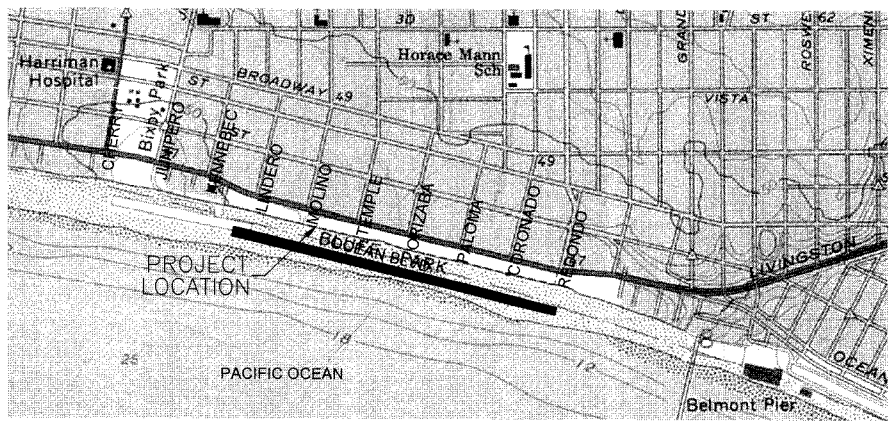

LOCATION MAP

SCALE: NONE

CLBBM 1743 NGVD1929 (1985ADJ)	**BEACH BIKE PATH** BRASS DISC FLUSH IN CONC. AT SE'LY SIDE OF TRUCK CROSSING SLAB STAMPED "CLB BP 5 STA RICH 1987" 205FT +/- E'LY OF NE'LY COR. JUNIPERO AVE BEACH PARKING LOT	7.181 FT
CLBBM 1744 NGVD1929 (1985ADJ)	**BEACH BIKE PATH** BRASS DISC FLUSH IN CONC. AT SE'LY SIDE OF TRUCK CROSSING SLAB STAMPED "CLB BP 6 STA JACK 1987" 1075FT +/- E'LY OF NE'LY COR. JUNIPERO AVE BEACH PARKING LOT	8.991 FT
CLBBM 1745 NGVD1929 (1985ADJ)	**BEACH BIKE PATH** BRASS DISC FLUSH IN CONC. AT SE'LY SIDE OF TRUCK CROSSING SLAB STAMPED "CLB BP 7 STA MURRAY 1987" 2075FT +/- E'LY OF NE'LY COR. JUNIPERO AVE BEACH PARKING LOT	7.588 FT
CLBBM 1746 NGVD1929 (1985ADJ)	**BEACH BIKE PATH** BRASS DISC FLUSH IN CONC. AT SE'LY SIDE OF TRUCK CROSSING SLAB STAMPED "CLB BP 8 STA METZ 1987" 3050FT +/- E'LY OF NE'LY COR. JUNIPERO AVE BEACH PARKING LOT	8.995 FT

SHEET INDEX

SHEET #		TITLE
1.	G-1.0	TITLE SHEET
2.	G-1.1	GENERAL NOTES (1 OF 2)
3.	G-1.2	GENERAL NOTES (2 OF 2)
4.	SN-1.0	PLAN VIEWS STA. 0+00 TO STA. 6+00
5.	SN-1.1	PLAN VIEWS STA. 6+00 TO STA. 12+00 (FOR REFERENCE ONLY)
6.	SN-1.2	PLAN VIEWS STA. 12+00 TO STA. 18+00
7.	SN-1.3	PLAN VIEWS STA. 18+00 TO STA. 24+00
8.	SN-1.4	PLAN VIEWS STA. 24+00 TO STA. 30+00
9.	SN-1.5	PLAN VIEWS STA. 30+00 TO STA. 36+00 (FOR REFERENCE ONLY)
10.	SN-2.0	ELEVATION VIEW SOIL NAIL AREA 1
11.	SN-2.1	ELEVATION VIEW SOIL NAIL AREA 2
12.	SN-2.2	ELEVATION VIEW SOIL NAIL AREA 3
13.	SN-3.0	CROSS SECTIONS SOIL NAIL AREA 1
14.	SN-3.1	CROSS SECTIONS SOIL NAIL AREA 2
15.	SN-3.2	CROSS SECTIONS SOIL NAIL AREA 3
16.	SN-4.0	DETAILS (1 OF 2)
17.	SN-4.1	DETAILS (2 OF 2)
18.	S-2.0	PLAN VIEWS STA. 0+00 TO STA. 6+00
19.	S-2.1	PLAN VIEWS STA. 6+00 TO STA. 12+00 (FOR REFERENCE ONLY)
20.	S-2.2	PLAN VIEWS STA. 12+00 TO STA. 18+00
21.	S-2.3	PLAN VIEWS STA. 18+00 TO STA. 24+00
22.	S-2.4	PLAN VIEWS STA. 24+00 TO STA. 30+00
23.	S-2.5	PLAN VIEWS STA. 30+00 TO STA. 36+00
24.	S-3.0	STRUCTURAL DETAILS
25.	L-2.01	EROSION FABRIC PLAN
26.	L-2.02	EROSION FABRIC PLAN
27.	L-3.01	IRRIGATION LEGENDS
28.	L-3.02	IRRIGATION DETAILS
29.	L-3.03	IRRIGATION DETAILS
30.	L-4.01	IRRIGATION PLAN
31.	L-4.02	IRRIGATION PLAN (FOR REFERENCE ONLY)
32.	L-4.03	IRRIGATION PLAN
33.	L-4.04	IRRIGATION PLAN
34.	L-4.05	IRRIGATION PLAN
35.	L-4.06	IRRIGATION PLAN (FOR REFERENCE ONLY)
36.	L-4.07	IRRIGATION PLAN (FOR REFERENCE ONLY)
37.	L-5.01	PLANTING PLAN
38.	L-5.02	PLANTING PLAN (FOR REFERENCE ONLY)
39.	L-5.03	PLANTING PLAN
40.	L-5.04	PLANTING PLAN
41.	L-5.05	PLANTING PLAN
42.	L-5.06	PLANTING PLAN (FOR REFERENCE ONLY)
43.	L-5.07	PLANTING PLAN (FOR REFERENCE ONLY)
44.	L-6.01	PLANTING DETAILS & NOTES

SHEET DESIGNATION KEY

G GENERAL SHEETS
SN SOIL NAIL SHEETS
S STRUCTURAL SHEETS
L LANDSCAPE SHEETS

CONSTRUCTION LEGEND

1. EXISTING SIDEWALK
2. EXISTING BIKE PATH
3. EXISTING STAIRS
4. EXISTING UTILITY BOXES
5. EXISTING TELEPHONE POLE
6. EXISTING ELECTRICAL TRANSFORMER
7. EXISTING RETAINING WALL
8. EXISTING GABION WALL
9. EXISTING RAMP
10. EXISTING HANDRAIL
11. EXISTING LIGHT POLE
12. EXISTING CONCRETE CULVERT
13. EXISTING SOIL NAIL WALL
14. VEHICULAR ACCESS
15. EXISTING 2" ø IRRIGATION LINE AT BOTTOM OF SLOPE

(#) PROTECT IN PLACE

GRAPHIC LEGEND

DETAIL MARK: NUMBER 2 / SHEET 10/22

SECTION MARK: NUMBER A / SHEET 10/22 — A 10/22

VIEW MARK: NUMBER 1 / SHEET 10/22 — TITLE — NOT TO SCALE

APPROVED
Zoning & Development Services
Department of Planning & Building
OCT 26 2012

10/29/12
Frank Ho
BPFS 136623

2220 E. OCEAN BLVD
APPROVAL:
PARKS, RECREATION & MARINE
1/23/13 DATE

FN:124406-SN-100%CAD_Review Comments
DATE: 3/16/12

KLEINFELDER
Bright People. Right Solutions.
620 West 16th Street
Long Beach, CA 90813
PH. 562-432-1696 FAX. 562-432-1796
www.kleinfelder.com

RJM DESIGN GROUP
31591 Camino Capistrano
San Juan Capistrano, CA 92675
www.RJMdesigngroup.com
(949) 493-2690 fax
(949) 493-3004 phone

REGISTERED PROFESSIONAL ENGINEER
MARIUSZ P. SIERADZKI
No. C 56925
CIVIL
STATE OF CALIFORNIA

G-1.0

CITY OF LONG BEACH - DEPARTMENT OF PUBLIC WORKS - ENGINEERING BUREAU
333 W. OCEAN BLVD, LONG BEACH, CA 90802

OCEAN BOULEVARD EROSION AND ENHANCEMENT PROJECT, PHASE 2
TITLE SHEET

No.	DATE	REVISIONS SHEET	APPROVAL

AS-BUILT: DATE

REF. DWG. B-4506

APPROVALS

ASSISTANT CITY ENGINEER — DATE 10/23/12
CONSTRUCTION SERVICES OFFICER — DATE 10/24/12
CITY TRAFFIC ENGINEER — DATE
CITY ENGINEER — DATE 10/29/12

DESIGNED BY: RDL/KLF	DESIGN CHECK BY: DMC/KLF
DRAWN BY: JJS/KLF	DRAFTING CHECK BY: RDL/KLF
SECTION HEAD	
PROJECT MANAGER	
INSPECTION	
SURVEY CONTROL	

GRAPHIC SCALE 0 1 2 3

FIELD BOOK — PAGE

NO. R- 6959

JOB NO. PW8260 13

SHEET 1 OF 44

DRAWING NO. B-4562

G:\124406_Long Beach Bluffs\100% Submittal\124406-SN-100%CAD_Review Comments.dwg 10/18/12 - 11:33am jstewart

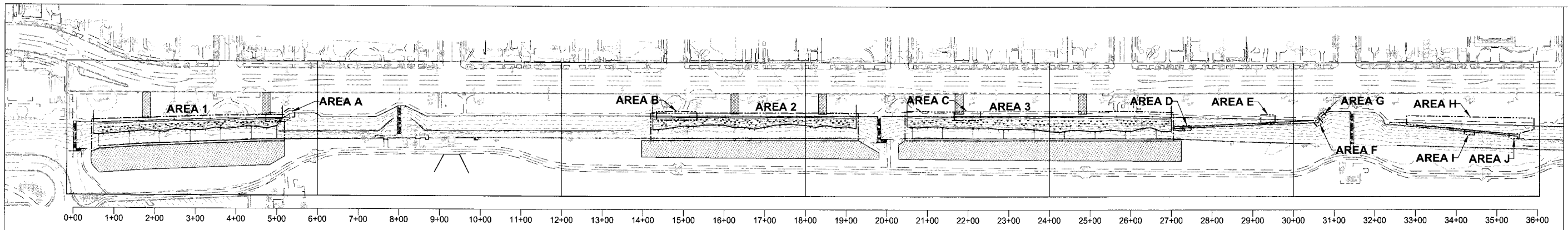

EXTENT OF SOIL NAIL AREA | SHOTCRETE STAGING AREA | CONSTRUCTION STAGING AREA

CONSTRUCTION LIMITS | **AREA 1-3**= CONSTRUCTION AREA | **AREA A-J**= REPAIR AREA

1 PLAN VIEW

0 120 240
SCALE IN FEET

STAGING GENERAL NOTES:

1. CONTRACTOR SHALL MAINTAIN A 20' MINIMUM CLEARANCE AT ALL TIMES FROM BIKE PATH, STAIRS AND PUBLIC ROUTES.
2. VEHICLES **MAY NOT** DRIVE ON THE BIKE PATH BUT MAY CROSS OVER THE BIKE PATH AT DESIGNATED REINFORCED AREAS SHOWN.
3. STAGING AREAS SHALL BE ENCLOSED WITH 6' HIGH CHAIN LINK FENCE WITH A GREEN SCREEN AND SHALL ONLY BE ALLOWED ADJACENT (+/- 50') TO THE AREAS BEING WORKED ON. THE FENCING SHALL NOT EXTEND BEYOND THE CONSTRUCTION STAGING LIMITS SHOWN ON THE PLANS.
4. STAGING AREAS SHALL BE SECURED AT ALL TIMES. REFER TO GENERAL REQUIREMENTS FOR FURTHER RULES AND REQUIREMENTS.
5. CONTRACTOR SHALL PROVIDE NECESSARY MEASURES TO PROTECT BEACH FROM EQUIPMENT OILS AND OTHER FLUIDS IN CASE OF SPILLAGE/LEAKAGE.

GENERAL NOTES

GENERAL
ALL WORK EMBRACED HEREIN SHALL BE DONE IN ACCORDANCE WITH "STANDARD SPECIFICATIONS FOR PUBLIC WORKS CONSTRUCTION" (GREENBOOK) TOGETHER WITH THE CITY OF LONG BEACH AMENDMENTS TO SAID SPECIFICATIONS, CITY OF LONG BEACH STANDARD PLANS, AND STANDARD PLANS FOR PUBLIC WORKS CONSTRUCTION (SPPWC), ALL AS MOST RECENTLY ADOPTED BY THE CITY, 2009 EDITION OR LATER.

THE CONTRACTOR AND SUBCONTRACTORS ARE RESPONSIBLE FOR THE CONSTRUCTION PROCESS AND THE SAFETY OF THE WORKERS. THIS INCLUDES BUT IS NOT LIMITED TO, THE CONSTRUCTION SEQUENCE, TEMPORARY HANDRAILS, EXCAVATION ACCESS, AND BARRIERS. IT ALSO INCLUDES LIFTING OF MATERIALS AND CONSTRUCTION EQUIPMENT INTO AND OUT OF THE EXCAVATION, TEMPORARY BRACING OF SINGLE-SIDED FORMWORK, TEMPORARY SHORING OF EXCAVATIONS, AND STABILITY OF ALL TEMPORARY CUT SLOPES.

THE CONTRACTOR SHALL PROVIDE PROTECTION OF PEDESTRIANS AND VEHICULAR TRAFFIC WHEN CONSTRUCTION ACTIVITIES REQUIRE SUCH.

LIMITS OF WORK
LIMITS OF WORK AS SHOWN ON PLANS ARE APPROXIMATE MINOR IMPROVEMENTS MAY BE REQUIRED ADJACENT TO LIMITS AT ENDS

CONSTRUCTION SEQUENCING
CONSTRUCTION SEQUENCING SHALL BE:

1. CONSTRUCT SOIL NAIL AREA AND REGRADE LOWER SLOPE
2. REPAIR SIDEWALK, HANDRAIL AND UNDERMINED HARDSCAPE
3. IRRIGATION INSTALLATION AND LANDSCAPING

THIS APPLIES TO EACH OF THE SOIL NAIL AREAS SEPARATELY.

BUILDING CODES, DESIGN MANUALS, AND SPECIFICATIONS
2010 CALIFORNIA BUILDING CODE
BUILDING CODE REQUIREMENTS FOR STRUCTURAL CONCRETE (ACI 318-08)
AISC MANUAL OF STEEL CONSTRUCTION, LRFD THIRTEENTH EDITION
MIN. DESIGN LOAD FOR BUILDINGS AND OTHER STRUCTURES (ASCE 7-05)
2003 FHWA GEOTECHNICAL ENGINEERING CIRCULAR NO. 7 - SOIL NAIL WALLS
1996 FHWA MANUAL FOR DESIGN AND CONSTRUCTION OF SOIL NAIL WALLS. (REVISED 1998)
1994 FHWA SOIL NAILING INSPECTORS MANUAL - SOIL NAIL WALLS (REVISED 1998)
STANDARD SPECIFICATIONS SHOULD BE IN ACCORDANCE WITH THE "GREENBOOK" STANDARD SPECIFICATIONS FOR PUBLIC WORKS CONSTRUCTION, 2012 EDITION.

DESIGN LIVE LOADS - TRAFFIC SURCHARGE = 250 PSF VERTICAL

SUBSURFACE DESIGN
ALL SUBSURFACE SOIL AND WATER PARAMETERS USED IN THE DESIGN WERE BASED ON THE SUBSURFACE CHARACTERIZATION PRESENTED IN THE REPORT TITLED, "GEOTECHNICAL STUDY PROPOSED SLOPE IMPROVEMENTS BLUFF PARK E. OCEAN BLVD. BETWEEN LOMA AVE. AND LINDERO AVE. LONG BEACH, CALIFORNIA" BY KLEINFELDER DATED APRIL 30, 2012 AND IN THE CORRESPONDING ADDENDUM FOR PHASE 2 BY KLEINFELDER DATED **JULY 5**, 2012.

THE FOLLOWING SOIL PROPERTIES WERE USED IN THE DESIGN OF THE SOIL NAIL AREA.

SOIL UNIT	MOIST UNIT WEIGHT (PCF)	FRICTION (DEG)	COHESION (PSF)	ULTIMATE NAIL PULLOUT RESISTANCE (K/FT)
Qols (0 - 25')	125	30	100	2.7
Qols (25' +)	110	33	0	2.7

A NOMINAL 6-INCH DIAMETER SOIL NAIL DRILL HOLE WAS ASSUMED FOR THE PULL OUT CALCULATIONS

STRUCTURAL GENERAL NOTES

1. THE CONTRACTOR SHALL SUPERVISE AND DIRECT THE WORK AND SHALL BE SOLELY RESPONSIBLE FOR ALL CONSTRUCTION MEANS, METHODS, PROCEDURES, TECHNIQUES, AND SEQUENCE.
2. THE STRUCTURE HAS BEEN DESIGNED TO RESIST DESIGN LOADS ONLY AS A COMPLETE STRUCTURE. APPLICATIONS OF CONSTRUCTION LOADS TO THE PARTIALLY COMPLETED STRUCTURE SHALL BE CONSIDERED BY THE CONTRACTOR AND SO INCLUDED IN THE DESIGN OF SHORING, BRACING, FORMWORK, AND ANY OTHER SUPPORTING ELEMENTS PROVIDED FOR CONSTRUCTION OF THE STRUCTURE. DURING ERECTION AND UNTIL ALL PERMANENT CONNECTIONS ARE MADE, THE CONTRACTOR MUST PROVIDE TEMPORARY BRACING FOR THE STRUCTURE IN ALL DIRECTIONS.
3. THE GENERAL CONTRACTOR SHALL CHECK AND VERIFY ALL DIMENSIONS AND GRADE CONDITIONS, (BOTH NEW AND EXISTING) REPORTING ANY DISCREPANCIES TO THE CITY ENGINEER PRIOR TO ORDERING MATERIALS OR PROCEEDING WITH ANY PHASE OF THE WORK.
4. FUTURE LOADS: UNLESS SPECIFICALLY NOTED, THERE ARE NO PROVISIONS MADE FOR FUTURE FLOORS, ROOFS, OR OTHER LOADS.
5. UTILITY LINES AND PIPELINES SHALL NOT BE PLACED THROUGH FOUNDATIONS WITHOUT APPROVAL OF THE CITY ENGINEER. CONTRACTOR SHALL SUBMIT DETAILED DRAWINGS OF ALL SUCH CONDITIONS PRIOR TO CONSTRUCTION.
6. ANCHOR BOLTS, REINFORCED STEEL, THREADED RODS, AND OTHER EMBEDDED STEEL ITEMS SHALL BE CAST-IN-PLACE WHERE DETAILED ON THE DRAWINGS OR WHERE APPROVED BY THE STRUCTURAL ENGINEER.
7. THE CONTRACTOR SHALL DESIGN AND PROVIDE SHORING AND BRACING IN ORDER TO PREVENT CAVING AND PROTECT EXISTING AND NEW STRUCTURES FROM EXCESSIVE MOVEMENTS DURING THE CONSTRUCTION PERIOD.
8. CARRY OUT CONTINUOUS CONTROL OF SURFACE AND SUBSURFACE WATER DURING CONSTRUCTION SUCH THAT FOUNDATION WORK IS DONE IN THE DRY AND ON UNDISTURBED SUBGRADE MATERIAL. NO FOUNDATION CONCRETE SHALL BE PLACED IN WATER OR FROZEN SUBGRADE MATERIAL.

GROUNDWATER
BASED ON THE GEOTECHNICAL DATA, A STATIC GROUNDWATER TABLE WAS ENCOUNTERED AT ELEVATION +3 TO +7 FEET ABOVE MEAN SEA LEVEL. A PERCHED GROUNDWATER TABLE CAN FORM ON THE RELATIVELY IMPERMEABLE SILTY AND CLAYEY UNITS DURING AND AFTER THE RAINY SEASON AND/OR AFTER PERIODS OF INTENSE RAINFALL.

EXISTING UNDERGROUND OBSTRUCTIONS AND UTILITIES
THE CONTRACTOR MUST FIELD VERIFY ALL EXISTING DIMENSIONS AND SITE CONDITIONS.THE CONTRACTOR IS RESPONSIBLE FOR DETERMINING ACTUAL LOCATIONS OF ALL EXISTING UTILITIES SHOWN ON THE PLANS AND THOSE UTILITIES OR UNDERGROUND OBSTRUCTIONS NOT SHOWN ON THE PLANS. ALL UTILITY LINES AND STRUCTURES THAT MAY BE DAMAGED ON ACCOUNT OF THE CONTRACTOR'S OPERATIONS SHALL BE REPAIRED OR REPLACED AT THE CONTRACTOR'S EXPENSE, TO THE SATISFACTION OF THE CITY.

SHOTCRETE

SHOTCRETE MATERIALS, AGGREGATE, REINFORCEMENT, PRECONSTRUCTION TESTS, REBOUND, JOINTS, DAMAGE, CURING AND STRENGTH TESTING SHALL BE IN ACCORDANCE WITH SECTION 1913 OF THE 2010 CBC. ALL SHOTCRETE SHALL HAVE A MINIMUM 28-DAY COMPRESSIVE STRENGTH OF 3000 PSI, AND A MINIMUM 3-DAY COMPRESSIVE STRENGTH OF 1500 PSI. SEE SPECIFICATION 03363 FOR SPECIFIC REQUIREMENTS. TYPE V PORTLAND CEMENT CONFORMING TO ASTM C150 SHALL BE USED IN THE SHOTCRETE DESIGN MIX. SUBMIT MIX DESIGNS IN ACCORDANCE WITH THE SPECIFICATION 03363.

SOIL NAIL GROUT
ALL SOIL NAIL GROUT SHALL HAVE A MINIMUM 28-DAY COMPRESSIVE STRENGTH OF 3000 PSI, AND A MINIMUM 3-DAY COMPRESSIVE STRENGTH OF 1500 PSI. SEE SPECIFICATION 03362 FOR SPECIFIC REQUIREMENTS. TYPE V PORTLAND CEMENT CONFORMING TO ASTM C150 SHALL BE USED IN THE SHOTCRETE DESIGN MIX. SUBMIT MIX DESIGNS IN ACCORDANCE WITH THE SPECIFICATION 03362.

SOIL NAIL SHOTCRETE FACING
THE SHOTCRETE FACING FOR THE SOIL NAIL WALL AREAS SHALL CONSIST OF A TWO PART SYSTEM. THE FIRST PART SHALL CONSIST OF A 4-INCH THICK CONSTRUCTION FACING WHICH WILL BE CONSTRUCTED FROM THE TOP DOWN IN CONJUNCTION WITH INSTALLATION OF THE SOIL NAILS. THE CONSTRUCTION SHOTCRETE FACING SHALL BE A SCREED FINISH. THE SECOND PART SHALL CONSIST OF A NOMINAL 6-INCH THICK ARCHITECTURALLY SCULPTED FACING.

NAIL BAR STEEL
ALL NAIL BARS SHALL CONFORM TO ASTM A615 / AASHTO M31, GRADE 75 , PER SPECIFICATION 03362 . ALL NAIL BARS SHALL BE DOUBLE ENCAPSULATED FOR CORROSION PROTECTION PER SPECIFICATION 03362.

SOIL NAIL SHOTCRETE FACING REINFORCING STEEL
ALL REINFORCING STEEL SHALL CONFORM TO ASTM A615 / AASHTO M31, GRADE 60 FOR DEFORMED BARS, AND ASTM A185 / AASHTO M55 FOR WELDED WIRE FABRIC (WWF). A REBAR AND WWF IN THE PERMANENT SHOTCRETE FACING SHALL BE EPOXY COATED IN ACCORDANCE WITH SPECIFICATION 03363.

SUBMIT REINFORCING STEEL SHOP DRAWINGS TO ENGINEER IN ACCORDANCE WITH SPECIFICATION 03363.

ALL REINFORCING STEEL DETAILS IN ACCORDANCE WITH ACI 315 MANUAL OF STANDARD PRACTICE.

ALL DEFORMED REINFORCING BAR LAPS SHALL BE AS SUMMARIZED IN THE FOLLOWING TABLE:

BAR SIZE	BAR DIA. (IN)	CLASS B LAP SPLICE LENGTH (DIA)	CLASS B LAP SPLICE LENGTH (IN)
#4	0.500	40 Ø	20
#5	0.625	40 Ø	25
#6	0.750	40 Ø	30
#7	0.875	40 Ø	35
#8	1.000	40 Ø	40

WELDED WIRE FABRIC (WWF) LAPS SHALL BE 12 INCHES.

SEE THE PLANS FOR SPECIFIC STRUCTURAL DETAILS. SUBMIT ALL SHOP DRAWINGS IN ACCORDANCE WITH SPECIFICATIONS 03362 AND O3363.

WELDING
MINIMUM WELD SIZE 1/4" CONTINUOUS FILLET. MINIMUM WELD LENGTH 4 INCHES. ALL WELDING TO BE PERFORMED BY WELDERS CERTIFIED PER AWS STANDARD SPECIFICATIONS. USE E70XX ELECTRODES.

CONCRETE NOTES:

1. CONCRETE CLASS 660-CW-4000P OR 650-CW-4000, TYPE V PORTLAND CEMENT FOR GRADE BEAMS AND BASE HANDRAIL REPAIR.
2. CONCRETE CLASS 520-C-2500P OR 520-C-2500, TYPE V PORTLAND CEMENT FOR SIDEWALK REPLACEMENT.
3. DESIGN AND CONSTRUCTION OF ALL CONCRETE SHALL CONFORM TO THE LATEST EDITIONS OF THE FOLLOWING APPLICABLE CODES: ACI 301 "SPECIFICATIONS FOR STRUCTURAL CONCRETE FOR BUILDINGS"; ACI 318 "BUILDING CODE REQUIREMENTS FOR REINFORCED CONCRETE".
4. SLUMP OF THE CONCRETE, AS DELIVERED TO THE POINT OF PLACEMENT INTO THE FORMS, SHALL BE HAVE A SLUMP NO GREATER THAN 4-INCHES.
5. ALL CONCRETE SHALL HAVE A MAXIMUM WATER-CEMENTITIOUS MATERIAL RATIO OF **0.40**.
6. THE TEMPERATURE OF THE CONCRETE AS DELIVERED SHALL NOT EXCEED 90 DEGREES F. WHEN THE AMBIENT TEMPERATURE DURING PLACING IS 40 DEGREES F OR LESS, OR IS EXPECTED TO BE AT ANY TIME WITHIN 6 HOURS AFTER PLACING, THE TEMPERATURE OF THE CONCRETE AS DELIVERED SHALL BE BETWEEN 55 AND 75 DEGREES F. CONCRETE THAT ARRIVES AT A TEMPERATURE THAT EXCEEDS 90 DEGREES F SHALL BE REJECTED AND NOT USED IN ANY AREA OF THE PROJECT.
7. THE FOLLOWING MINIMUM CONCRETE COVER SHALL BE PROVIDED FOR REINFORCING STEEL UNLESS SHOWN OTHERWISE ON DRAWINGS:
   CONCRETE CAST AGAINST EARTH.....3 IN.
   CONCRETE EXPOSED TO EARTH OR WEATHER
   #6 AND LARGER.....2 IN.
   #5 AND SMALLER & WWF.....1 ½ IN.
8. REINFORCEMENT SHALL BE COLD BENT WHENEVER BENDING IS REQUIRED.
9. DO NOT WELD OR TACKWELD REINFORCEMENT STEEL.
10. EARTH (SUBGRADE, BASE, OR SUBBASE COURSES) SURFACES UPON WHICH CONCRETE IS TO BE PLACED SHALL BE CLEAN, DAMP, AND FREE FROM DEBRIS, FROST, ICE, AND STANDING OR RUNNING WATER, PRIOR TO PLACEMENT OF CONCRETE, THE FOUNDATION SHALL BE WELL DRAINED AND SHALL BE SATISFACTORILY GRADED AND UNIFORMLY COMPACTED IN ACCORDANCE TO GEOTECHNICAL REPORT.
11. THE CONTRACTOR SHALL VERIFY INSTALLATION AND LOCATIONS OF ALL EMBEDDED ITEMS INCLUDING BUT NOT LIMITED TO INSERTS, ANCHOR BOLTS, DOWELS, BLOCKOUTS, SLEEVES, EMBEDDED PIPING, AND EMBEDDED CONDUIT PRIOR TO CONCRETE PLACEMENT.
12. A MINIMUM OF 72 HOURS SHALL ELAPSE BETWEEN ADJACENT CONCRETE PLACEMENTS.
13. CONCRETE SLABS, SHALL BE PLACED SO THAT THE SLAB THICKNESS IS AT NO POINT LESS THAN THAT INDICATED ON THE DRAWINGS.
14. A CHAMFER ¾" SHALL BE PROVIDED AT ALL EXPOSED EDGES OF CONCRETE, UNO., IN ACCORDANCE WITH ACI 301 SECTION 4.2.4.
15. ALL DOWELS, ANCHOR BOLTS, EMBEDDED STEEL, ELECTRICAL CONDUITS, PIPE SLEEVES, GROUNDS AND ALL OTHER EMBEDDED ITEMS AND FORMED DETAILS SHALL BE IN PLACE BEFORE START OF CONCRETE PLACEMENT.
16. PLACE CONCRETE IN A UNIFORM MANNER TO PREVENT THE FORMATION OF COLD JOINTS AND OTHER PLANES OF WEAKNESS. VIBRATE THE CONCRETE TO FULLY EMBED REINFORCING. DO NOT USE VIBRATORS TO TRANSPORT CONCRETE THROUGH CHUTES OR FORMWORK.
17. FOR COLD-WEATHER AND HOT-WEATHER CONCRETE PLACEMENT, CONFORM TO APPLICABLE ACI CODES AND RECOMMENDATIONS IN EITHER CASE, MATERIALS CONTAINING CHLORIDE, CALCIUM, SALT, ETC. SHALL NOT BE USED. PROTECT FRESH CONCRETE FROM WEATHER FOR 7 DAYS MINIMUM.
18. CHAIRS, BOLSTERS, BAR SUPPORTS, SPACERS: SIZED AND SHAPED FOR STRENGTH AND SUPPORT OF REINFORCEMENT DURING INSTALLATION AND PLACEMENT OF CONCRETE. ACCESSORIES FULLY OR PARTIALLY EXPOSED AFTER FORMS ARE REMOVED SHALL BE PLASTIC, GALVANIZED STEEL, OR PLASTIC COATED STEEL.

(CONTINUED ON SHEET 3)

KLEINFELDER
Bright People. Right Solutions.
620 West 16th Street
Long Beach, CA 90813
www.kleinfelder.com PH. 562-432-1696 FAX. 562-432-1796

G-1.1

SAVED PATH: G:\124406_Long Beach Bluffs\100% Submittal

REVISIONS | No. | DATE | SHEET | APPROVAL | DESCRIPTION

AS-BUILT: | REF. DWG. B-4506

DESIGNED BY: RDL/KLF | DRAWN BY: JJS/KLF | DESIGN CHECK BY: DMC/KLF | DRAFTING CHECK BY: RDL/KLF

REGISTERED PROFESSIONAL ENGINEER MARIUSZ P. SIERADZKI No. C 69025 CIVIL STATE OF CALIFORNIA
12-31-13

OCEAN BOULEVARD EROSION AND ENHANCEMENT PROJECT, PHASE 2 GENERAL NOTES (1 OF 2)

GRAPHIC SCALE 0 1 2 3

FIELD BOOK: N/A | PAGE: N/A

NO. R- 6959

JOB NO. PW8260 13

SHEET 2 OF 44

DRAWING NO. B-4562

CONCRETE NOTES (CONTINUED):

19. CONTRACTOR TO VERIFY THAT ANCHORS, SEATS, PLATES, REINFORCEMENT, AND OTHER ITEMS TO BE CAST INTO CONCRETE ARE ACCURATELY PLACED, HELD SECURELY, AND WILL NOT CAUSE HARDSHIP IN PLACING CONCRETE.

20. BOND IS REQUIRED AT CONSTRUCTION JOINTS REGARDLESS OF WHETHER OR NOT REINFORCED STEEL IS CONTINUOUS ACROSS THE JOINT AND MUST BE APPROVED BY STRUCTURAL ENGINEER PRIOR TO USE.

21. PLACE, SUPPORT, AND SECURE REINFORCEMENT TO PREVENT DISPLACEMENT DURING CONCRETE PLACEMENT. PLACE REINFORCEMENT ON CHAIRS AT 4'-0" MAXIMUM SPACING IN EITHER DIRECTION.

22. DO NOT FIELD CUT REINFORCING BARS UNLESS APPROVED BY THE CITY ENGINEER.

23. USE DELIVERY AND PLACEMENT METHODS THAT DO NOT CAUSE SEGREGATION. THE MAXIMUM FREE-FALL DROP HEIGHT ALLOWED FOR CONCRETE PLACEMENT SHALL BE 4 FEET.

24. PREVENT DEBRIS OR OTHER OBJECTIONABLE MATERIAL FROM BECOMING EMBEDDED IN THE CONCRETE.

25. PLACE CONCRETE WITHIN 90 MINUTES AFTER WATER IS ADDED TO CEMENT, UNLESS APPROPRIATE SET DELAY ADMIXTURES ARE USED. USE OF SET DELAY ADMIXTURES MUST BE APPROVED BY STRUCTURAL ENGINEER. CONCRETE OVER 90 MINUTES BEFORE PLACEMENT WILL BE REJECTED.

26. DO NOT PLACE CONCRETE DURING HEAVY RAIN; DEFINED AS MORE THAN 0.3 INCHES PER HOUR OR 0.03 INCHES IN 6 MINUTES.

27. IN UNUSUAL ADVERSE WEATHER, SUCH AS HEAVY RAIN, OR IS FORECAST TO OCCUR DURING PLACEMENT, AN INTERRUPTION IN PLACING OPERATIONS MAY BE APPROVED OR REQUIRED BY THE CITY ENGINEER.

28. FULLY CONSOLIDATE ALL PLACED CONCRETE MATERIALS PRIOR TO STOPPING WORK.

29. PROVIDE SHADING, FOG SPRAY, SPRINKLING, WET COVER, OR OTHER MEANS OF MAINTAINING CONCRETE BELOW THE MAXIMUM SPECIFIED TEMPERATURES.

30. DO NOT REMOVE FORMS UNTIL CONCRETE HAS SUFFICIENT STRENGTH TO SUPPORT ITS OWN WEIGHT. AS A MINIMUM, FORMS SHALL REMAIN IN PLACE FOR 36 HOURS AFTER COMPLETION OF RESPECTIVE CONCRETE PLACEMENT. NO LOADS ARE ALLOWED ON PLACED CONCRETE UNTIL 28-DAY STRENGTH IS ACHIEVED.

SIDEWALKS

SIDEWALKS JOINTS SHALL BE CONSTRUCTED IN ACCORDANCE WITH THE STANDARD PLANS FOR PUBLIC WORKS CONSTRUCTION, CURB AND SIDEWALK JOINTS (STANDARD PLAN 112-2).

SCULPTED SHOTCRETE FACING

THE SHOTCRETE FACING FOR THE SOIL NAIL WALL AREAS SHALL CONSIST OF A TWO PART SYSTEM. THE SECOND PART SHALL CONSIST OF A NOMINAL 6-INCH THICK ARCHITECTURALLY SCULPTED FACING APPLIED DIRECTLY OVER THE CLEANED AND PREPARED CONSTRUCTION FACING. THE PERMANENT SHOTCRETE FACING SHALL BE ARCHITECTURALLY SCULPTED SHOTCRETE PER THE SPECIFICATION 03363. A TEST PANEL OF THE ARCHITECTURAL FINISH IS REQUIRED FOR APPROVAL PRIOR TO INSTALLATION OF THE SCULPTED SHOTCRETE FACING. EXAMPLE PHOTOS OF POTENTIAL SCULPTED SHOTCRETE FACING ARE ILLUSTRATED BELOW.

SCULPTED SHOTCRETE EXAMPLE 1

SCULPTED SHOTCRETE EXAMPLE 3

SCULPTED SHOTCRETE EXAMPLE 2

SCULPTED SHOTCRETE EXAMPLE 4

STRUCTURAL OBSERVATION NOTE ON CONSTRUCTION DOCUMENTS

THE REGISTERED DESIGN PROFESSIONAL RESPONSIBLE FOR THE STRUCTURAL DESIGN SHALL IDENTIFY THE FREQUENCY AND EXTENT OF REQUIRED STRUCTURAL OBSERVATIONS. AS A MINIMUM, THE FOLLOWING STRUCTURAL OBSERVATION NOTE AND FREQUENCY OF REQUIRED STRUCTURAL OBSERVATIONS SHALL BE MADE PART OF THE APPROVED CONSTRUCTION DOCUMENTS.

STRUCTURAL OBSERVATION

1. STRUCTURAL OBSERVATION IS THE VISUAL OBSERVATION OF THE ELEMENTS AND CONNECTIONS OF THE STRUCTURAL SYSTEM BY A REGISTERED DESIGN PROFESSIONAL FOR GENERAL CONFORMANCE TO THE APPROVED CONSTRUCTION DOCUMENTS AT SIGNIFICANT CONSTRUCTION STAGES AND AT THE COMPLETION OF THE STRUCTURAL SYSTEM. STRUCTURAL OBSERVATION DOES NOT INCLUDE OR WAIVE THE RESPONSIBILITY FOR THE INSPECTION REQUIRED BY LBMC SECTION 18.07.050, CBC SECTION 1704 OR OTHER SECTIONS OF THE LBMC OR CBC. STRUCTURAL OBSERVATION SHALL BE PROVIDED IN ACCORDANCE WITH THE 2010 EDITION OF THE CALIFORNIA BUILDING CODE (CBC) SECTION 1710 AND AS AMENDED BY THE LONG BEACH MUNICIPAL CODE (LBMC) SECTIONS 18.40.210 AND 18.40.220.

2. WHERE STRUCTURAL OBSERVATION IS REQUIRED, A "STRUCTURAL OBSERVATION DESIGNATION" FORM SHALL BE COMPLETED, SIGNED AND SUBMITTED TO THE PUBLIC WORKS DEPARTMENT' BUILDING AND SAFETY BUREAU NAMING THE STRUCTURAL OBSERVER WHO IS TO PERFORM THE REQUIRED STRUCTURAL OBSERVATION AND DESCRIBING THE STAGES OF CONSTRUCTION AND FREQUENCY AT WHICH STRUCTURAL OBSERVATION IS TO OCCUR.

3. THE CITY OF LONG BEACH SHALL EMPLOY A STRUCTURAL OBSERVER TO PERFORM STRUCTURAL OBSERVATIONS AS DEFINED IN CBC SECTION 1702. PURSUANT TO LBMC SECTION 18.40.210, THE STRUCTURAL OBSERVER SHOULD BE ONE OF THE FOLLOWING INDIVIDUALS:

   A. THE REGISTERED DESIGN PROFESSIONAL RESPONSIBLE FOR THE STRUCTURAL DESIGN, OR

   B. A REGISTERED DESIGN PROFESSIONAL DESIGNATED BY THE REGISTERED DESIGN PROFESSIONAL RESPONSIBLE FOR THE STRUCTURAL DESIGN.

4. PRE-CONSTRUCTION MEETING:

   A. PRIOR TO CONSTRUCTION COMMENCEMENT, THE STRUCTURAL OBSERVER, AS CITY OF LONG BEACH'S REPRESENTATIVE, SHALL COORDINATE AND PRESIDE. OVER A PRE-CONSTRUCTION MEETING WITH THE REGISTERED DESIGN PROFESSIONAL RESPONSIBLE FOR THE STRUCTURAL DESIGN (IF DIFFERENT THAN THE STRUCTURAL OBSERVER), CITY OF LONG BEACH, CONTRACTORS, AFFECTED SUBCONTRACTORS, REGISTERED DEPUTY INSPECTORS AND THE BUILDING INSPECTOR.

   B. THE PURPOSE OF THE PRE-CONSTRUCTION MEETING IS TO IDENTIFY THE MAJOR STRUCTURAL ELEMENTS AND CONNECTIONS THAT AFFECT THE VERTICAL AND LATERAL FORCE-RESISTING SYSTEMS OF THE STRUCTURE AND TO REVIEW THE SCHEDULING OF REQUIRED STRUCTURAL OBSERVATIONS.

   C. THE FIRST REPORT TO THE BUILDING INSPECTOR SHALL INCLUDE A RECORD OF THE PRE-CONSTRUCTION MEETING AND NAME OF THE DESIGNATED STRUCTURAL OBSERVER TO PERFORM THE STRUCTURAL OBSERVATION PROGRAM.

   D. ADDITIONAL CONSTRUCTION MEETINGS MAY BE REQUIRED AT DIFFERENT STAGES AND/OR FOR DIFFERENT TRADES.

5. THE STRUCTURAL OBSERVER SHALL COMPLETE, SIGN, WET STAMP AND SUBMIT A "STRUCTURAL OBSERVATION REPORT" FORM AFTER EACH SITE VISIT REQUIRING STRUCTURAL OBSERVATIONS.

6. OBSERVATION SCHEDULE:
WHERE THE STRUCTURAL OBSERVATION IS REQUIRED, THE STRUCTURAL OBSERVER SHALL PERFORM SITE VISITS AT EACH SIGNIFICANT CONSTRUCTION STAGES IN THE PROGRESS OF THE WORK THAT ALLOW FOR CORRECTION OF DEFICIENCIES WITHOUT SUBSTANTIAL EFFORT OR UNCOVERING OF THE WORK INVOLVED. THE STRUCTURAL OBSERVER SHALL, AS A MINIMUM, PERFORM STRUCTURAL OBSERVATION FOR THE FOLLOWING STRUCTURAL ELEMENTS AND THEIR CONNECTIONS AT THE SCHEDULED INTERVALS OR STAGES OF CONSTRUCTION:

STRUCTURAL OBSERVATION		
TYPE	STRUCTURAL ELEMENTS OR CONNECTIONS TO BE OBSERVED	SCHEDULED INTERVAL OR STAGE OF CONSTRUCTION
FOUNDATIONS		
	UNDERPINNING PILES	PERIODIC
	GRADE BEAMS	PERIODIC
WALLS	SOIL NAIL FACING CONNECTION	PERIODIC
	REINFORCEMENT	PERIODIC
	SHOTCRETE PLACEMENT	PERIODIC

7. OBSERVED DEFICIENCIES:

   A. OBSERVED DEFICIENCIES BY THE STRUCTURAL OBSERVER SHALL BE REPORTED IN WRITING ON THE 'STRUCTURAL OBSERVATION REPORT" FORM TO THE CITY OF LONG BEACH, REGISTERED DESIGN PROFESSIONAL RESPONSIBLE FOR THE STRUCTURAL DESIGN (IF DIFFERENT THAN THE STRUCTURAL OBSERVER), CONTRACTORS, AFFECTED SUBCONTRACTORS, REGISTERED DEPUTY INSPECTORS AND THE BUILDING INSPECTOR.

   B. THE CONTRACTOR SHALL RESOLVE ALL IDENTIFIED DEFICIENCIES TO THE SATISFACTION OF THE STRUCTURAL OBSERVER AND BUILDING INSPECTOR PRIOR TO REQUESTING THE NEXT INSPECTION.

   C. AT THE CONCLUSION OF THE PROJECT, THE STRUCTURAL OBSERVER SHALL SUBMIT TO THE BUILDING INSPECTOR A FINAL WRITTEN STATEMENT ON THE 'STRUCTURAL OBSERVATION REPORT" FORM THAT THE SITE VISITS HAVE BEEN MADE AND REPORT THAT ALL OBSERVED DEFICIENCIES, TO THE BEST OF THE STRUCTURAL OBSERVER'S KNOWLEDGE, HAVE BEEN RESOLVED AND THAT THE STRUCTURAL SYSTEM GENERALLY CONFORMS TO THE APPROVED CONSTRUCTION DOCUMENTS.

8. WHEN THE CITY OF LONG BEACH ELECTS TO CHANGE THE STRUCTURAL OBSERVER, THE CITY OF LONG BEACH SHALL:

   A. NOTIFY THE BUILDING INSPECTOR IN WRITING AND RECEIVE APPROVAL BEFORE REQUESTING THE NEXT INSPECTION,

   B. CALL FOR A NEW PRE-CONSTRUCTION MEETING AND NOTIFY THE BUILDING INSPECTOR IN WRITING THAT THE MEETING WAS CONDUCTED, AND

   C. FURNISH THE NEW STRUCTURAL OBSERVER WITH COPIES OF ALL PREVIOUS STRUCTURAL OBSERVATION REPORTS.

THE NEW STRUCTURAL OBSERVER SHALL APPROVE THE CORRECTION OF ALL DEFICIENCIES IDENTIFIED IN THE PREVIOUS REPORTS UNLESS OTHERWISE APPROVED BY THE BUILDING INSPECTOR.

GRADING NOTES

PERFORM GRADING IN ACCORDANCE WITH SECTION 03360 OF THE SPECIFICATIONS WHICH HAS INCORPORATED THE RECOMMENDATIONS PRESENTED IN THE REPORT TITLED, "GEOTECHNICAL STUDY PROPOSED SLOPE IMPROVEMENTS BLUFF PARK E. OCEAN BLVD. BETWEEN LOMA AVE. AND LINDERO AVE. LONG BEACH, CALIFORNIA" BY KLEINFELDER DATED APRIL 30, 2012 AND IN THE CORRESPONDING ADDENDUM FOR PHASE 2 BY KLEINFELDER DATED **JULY 5**, 2012.

TIME EXTENSION
LOCAL COASTAL DEVELOPMENT PERMIT CONDITIONS OF APPROVAL
APP. NO. 1111-05
DATE: NOVEMBER 14, 2011

1. THE USE PERMITTED ON THE SUBJECT SITE, IN ADDITION TO OTHER USES PERMITTED IN THE P ZONING DISTRICT, SHALL BE A REQUEST TO REINFORCE SLOPES, CONTROL EROSION, AND ADD NEW LANDSCAPING AND IRRIGATION ON A PORTION OF THE BLUFF ADJACENT TO OCEAN BLVD BETWEEN 20TH PLACE AND 36TH PLACE, LOCATED IN THE COASTAL ZONE.

2. THIS TIME EXTENSION REQUEST, EXTENDS THE APPROVAL OF THE APPROVED LOCAL COASTAL DEVELOPMENT PERMIT FROM JANUARY 12, 2010 TO JUNE 12, 2013.

3. ALL CONDITIONS OF APPROVAL RELATED TO APP. NO. 0912-02 WILL REMAIN IN EFFECT.

4. THIS PERMIT AND ALL DEVELOPMENT RIGHTS HEREUNDER SHALL TERMINATE TWO YEARS FROM THE EFFECTIVE DATE (FINAL ACTION DATE OR, IF IN THE APPEALABLE AREA OF THE COASTAL ZONE, 21 DAYS AFTER THE LOCAL FINAL ACTION DATE) OF THIS PERMIT UNLESS CONSTRUCTION IS COMMENCED, A BUSINESS LICENSE ESTABLISHING THE USE IS OBTAINED OR A TIME EXTENSION IS GRANTED, BASED ON A WRITTEN AND APPROVED REQUEST SUBMITTED PRIOR TO THE EXPIRATION OF THE ONE YEAR PERIOD AS PROVIDED IN SECTION 21.21.406 OF THE LONG BEACH MUNICIPAL CODE.

5. THIS APPROVAL IS REQUIRED TO COMPLY WITH THESE CONDITIONS OF APPROVAL AS LONG AS THE USE IS ON THE SUBJECT SITE. AS SUCH, THE SITE SHALL ALLOW PERIODIC RE- INSPECTIONS, AT THE DISCRETION OF CITY OFFICIALS, TO VERIFY COMPLIANCE. THE PROPERTY OWNER SHALL REIMBURSE THE CITY FOR THE INSPECTION COST AS PER THE SPECIAL BUILDING INSPECTION SPECIFICATIONS ESTABLISHED BY CITY COUNCIL (SEC. 21.25.412, 21.25.212).

SPECIAL CONDITIONS OF APPROVAL

6. THE DEVELOPER WILL BE RESPONSIBLE FOR THE FOLLOWING SITE IMPROVEMENTS, PRIOR TO THE ISSUANCE OF BUILDING PERMITS AND TO THE SATISFACTION OF THE DIRECTOR OF DEVELOPMENT SERVICES:
   A. NO PAYPHONES SHALL BE INSTALLED ON SITE.
   B. POST "PARK HOURS" SIGN ON SITE, WITH LONG BEACH MUNICIPAL CODE SECTION.
   C. ANY GRAFFITI FOUND ON SITE MUST BE REMOVED WITHIN 24 HOURS OF ITS APPEARANCE.

STANDARD CONDITIONS

7. IF, FOR ANY REASON, THERE IS A VIOLATION OF ANY OF THE CONDITIONS OF THIS PERMIT OR IF THE USE/OPERATION IS FOUND TO BE DETRIMENTAL TO THE SURROUNDING COMMUNITY, INCLUDING PUBLIC HEALTH, SAFETY OR GENERAL WELFARE, ENVIRONMENTAL QUALITY OR QUALITY OF LIFE, SUCH SHALL CAUSE THE CITY TO INITIATE REVOCATION AND TERMINATION PROCEDURES OF ALL RIGHTS GRANTED HEREWITH.

8. THIS PERMIT SHALL BE INVALID IF THE OWNER(S) AND APPLICANT(S) HAVE FAILED TO RETURN WRITTEN ACKNOWLEDGMENT OF THEIR ACCEPTANCE OF THE CONDITIONS OF APPROVAL ON THE CONDITIONS OF APPROVAL ACKNOWLEDGMENT FORM SUPPLIED BY THE PLANNING BUREAU. THIS ACKNOWLEDGMENT MUST BE SUBMITTED WITHIN 30 DAYS FORM THE EFFECTIVE DATE OF APPROVAL (FINAL ACTION DATE OR, IF IN THE APPEALABLE AREA OF THE COASTAL ZONE, 21 DAYS AFTER THE LOCAL FINAL ACTION DATE). PRIOR TO THE ISSUANCE OF A BUILDING PERMIT, THE APPLICANT SHALL SUBMIT A REVISED SET OF PLANS REFLECTING ALL OF THE DESIGN CHANGES SET FORTH IN THE CONDITIONS OF APPROVAL TO THE SATISFACTION OF THE ZONING ADMINISTRATOR.

9. IN THE EVENT OF TRANSFER OF OWNERSHIP OF THE PROPERTY INVOLVED IN THIS APPLICATION, THE NEW OWNER SHALL BE FULLY INFORMED OF THE PERMITTED USE AND DEVELOPMENT OF SAID PROPERTY AS SET FORTH BY THIS PERMIT TOGETHER WITH ALL CONDITIONS, WHICH ARE A PART THEREOF. THESE SPECIFIC REQUIREMENTS MUST BE RECORDED WITH ALL TITLE CONVEYANCE DOCUMENTS AT TIME OF CLOSING ESCROW.

10. ALL CONDITIONS OF APPROVAL MUST BE PRINTED VERBATIM ON ALL PLANS SUBMITTED FOR PLAN REVIEW TO THE PLANNING AND BUILDING DEPARTMENT. THESE CONDITIONS MUST BE PRINTED ON THE SITE PLAN OR A SUBSEQUENT REFERENCE PAGE.

11. THE DIRECTOR OF LONG BEACH DEVELOPMENT SERVICES IS AUTHORIZED TO MAKE MINOR MODIFICATIONS TO THE APPROVED DESIGN PLANS OR TO ANY OF THE CONDITIONS OF APPROVAL IF SUCH MODIFICATIONS SHALL NOT SIGNIFICANTLY CHANGE/ALTER THE APPROVED DESIGN/PROJECT AND IF NO DETRIMENTAL EFFECTS TO NEIGHBORING PROPERTIES ARE CAUSED BY SAID MODIFICATIONS. THE ZONING ADMINISTRATOR OR PLANNING COMMISSION SHALL REVIEW ANY MAJOR MODIFICATIONS, RESPECTIVELY.

12. SITE DEVELOPMENT, INCLUDING LANDSCAPING, SHALL CONFORM TO THE APPROVED PLANS ON FILE IN THE DEPARTMENT OF LONG BEACH DEVELOPMENT SERVICES. AT LEAST ONE SET OF APPROVED PLANS CONTAINING PLANNING, BUILDING, FIRE, AND, IF APPLICABLE, REDEVELOPMENT AND HEALTH DEPARTMENT STAMPS SHALL BE MAINTAINED AT THE JOB SITE, AT ALL TIMES FOR REFERENCE PURPOSES DURING CONSTRUCTION AND FINAL INSPECTION.

13. ALL LANDSCAPED AREAS MUST BE MAINTAINED IN A NEAT AND HEALTHY CONDITION, INCLUDING PUBLIC PARKWAYS AND STREET TREES. ANY DYING OR DEAD PLANT MATERIALS MUST BE REPLACED WITH THE MINIMUM SIZE AND HEIGHT PLANT(S) REQUIRED BY CHAPTER 21.42 (LANDSCAPING) OF THE ZONING REGULATIONS.

14. THE PROPERTY SHALL BE DEVELOPED AND MAINTAINED IN A NEAT, QUIET, AND ORDERLY CONDITION AND OPERATED IN A MANNER SO AS NOT TO BE DETRIMENTAL TO ADJACENT PROPERTIES AND OCCUPANTS. THIS SHALL ENCOMPASS THE MAINTENANCE OF EXTERIOR FACADES OF THE BUILDING, DESIGNATED PARKING AREAS SERVING THE USE, FENCES AND THE PERIMETER OF THE SITE (INCLUDING ALL PUBLIC PARKWAYS).

15. SEPARATE BUILDING PERMITS ARE REQUIRED FOR SIGNS, FENCES, RETAINING WALLS, TRASH ENCLOSURES, FLAGPOLES, POLE-MOUNTED YARD LIGHTING FOUNDATIONS AND PLANTERS.

16. DEMOLITION, SITE PREPARATION, AND CONSTRUCTION ACTIVITIES ARE LIMITED TO THE FOLLOWING (EXCEPT FOR THE POURING OF CONCRETE WHICH MAY OCCUR AS NEEDED):

   A. WEEKDAYS AND FEDERAL HOLIDAYS: 7:00 A.M. TO 4:00 P.M.

17. THE APPLICANT SHALL DEFEND, INDEMNIFY, AND HOLD HARMLESS THE CITY OF LONG BEACH, ITS AGENTS, OFFICERS, AND EMPLOYEES FROM ANY CLAIM, ACTION, OR PROCEEDING AGAINST THE CITY OF LONG BEACH OR ITS AGENTS, OFFICERS, OR EMPLOYEES BROUGHT TO ATTACK, SET ASIDE, VOID, OR ANNUL AN APPROVAL OF THE CITY OF LONG BEACH, ITS ADVISORY AGENCIES, COMMISSIONS, OR LEGISLATIVE BODY CONCERNING THIS PROJECT. THE CITY OF LONG BEACH WILL PROMPTLY NOTIFY THE APPLICANT OF ANY SUCH CLAIM, ACTION, OR PROCEEDING AGAINST THE CITY OF LONG BEACH AND WILL COOPERATE FULLY IN THE DEFENSE. IF THE CITY OF LONG BEACH FAILS TO PROMPTLY NOTIFY THE APPLICANT OF ANY SUCH CLAIM, ACTION OR PROCEEDING OR FAILS TO COOPERATE FULLY IN THE DEFENSE, THE APPLICANT SHALL NOT, THEREAFTER, BE RESPONSIBLE TO DEFEND, INDEMNIFY, OR HOLD HARMLESS THE CITY OF LONG BEACH.

CITY OF LONG BEACH
DEPARTMENT OF DEVELOPMENT SERVICES
333 WEST OCEAN BOULEVARD • LONG BEACH, CALIFORNIA 90802 • FAX (562)570-6068

REVISED
NOTICE OF FINAL LOCAL ACTION

Application No.: 1111-05

Project Location: 3230 E. Ocean Boulevard

Applicant: Sarah Price
City of Long Beach – Department of Public Works
333 W. Ocean Boulevard, 9th Floor
Long Beach, CA 90802

Permit(s) Requested: Time Extension

Project Description: A Time Extension request to extend the approval of a Local Coastal Development Permit from January 12, 2010 to June 12, 2013.

Local action was taken by the: Zoning Administrator on: November 14, 2011

Decision: Conditionally Approved

Local action is final on: November 14, 2011

This project is in the Coastal Zone and IS appealable to the Coastal Commission.

"If you challenge the action in court, you may be limited to raising only those issues you or someone else raised at the public hearing described in this notice, or issues raised via written correspondence delivered to the (public entity conducting the hearing) at or prior to the public hearing."

See other side for City of Long Beach and California Coastal Commission appeal procedures and time limits.

Derek Burnham
Planning Administrator

Steven Valdez, Planner
Phone No.: (562)570-6571

District: 3

KLEINFELDER
Bright People. Right Solutions.
620 West 16th Street
Long Beach, CA 90813
www.kleinfelder.com PH. 562-432-1696 FAX. 562-432-1796

SAVED PATH: G:\124406_Long Beach Bluffs\100% Submittal

G-1.2

REVISIONS				
No.	DATE	SHEET	APPROVAL	DESCRIPTION
AS-BUILT:			REF. DWG. B-4506	

DESIGNED BY: RDL/KLF
DRAWN BY: JJS/KLF
DESIGN CHECK BY: DWC/KLF
DRAFTING CHECK BY: RDL/KLF

REGISTERED PROFESSIONAL ENGINEER MARIUSZ P. SIERADZKI No. C 56926 CIVIL STATE OF CALIFORNIA

OCEAN BOULEVARD EROSION AND ENHANCEMENT PROJECT, PHASE 2 GENERAL NOTES (2 OF 2)

GRAPHIC SCALE 0 1 2 3

PAGE N/A

FIELD BOOK N/A

NO. R- 6959
JOB NO. PW8260 13
SHEET 3 OF 44
DRAWING NO. B-4562

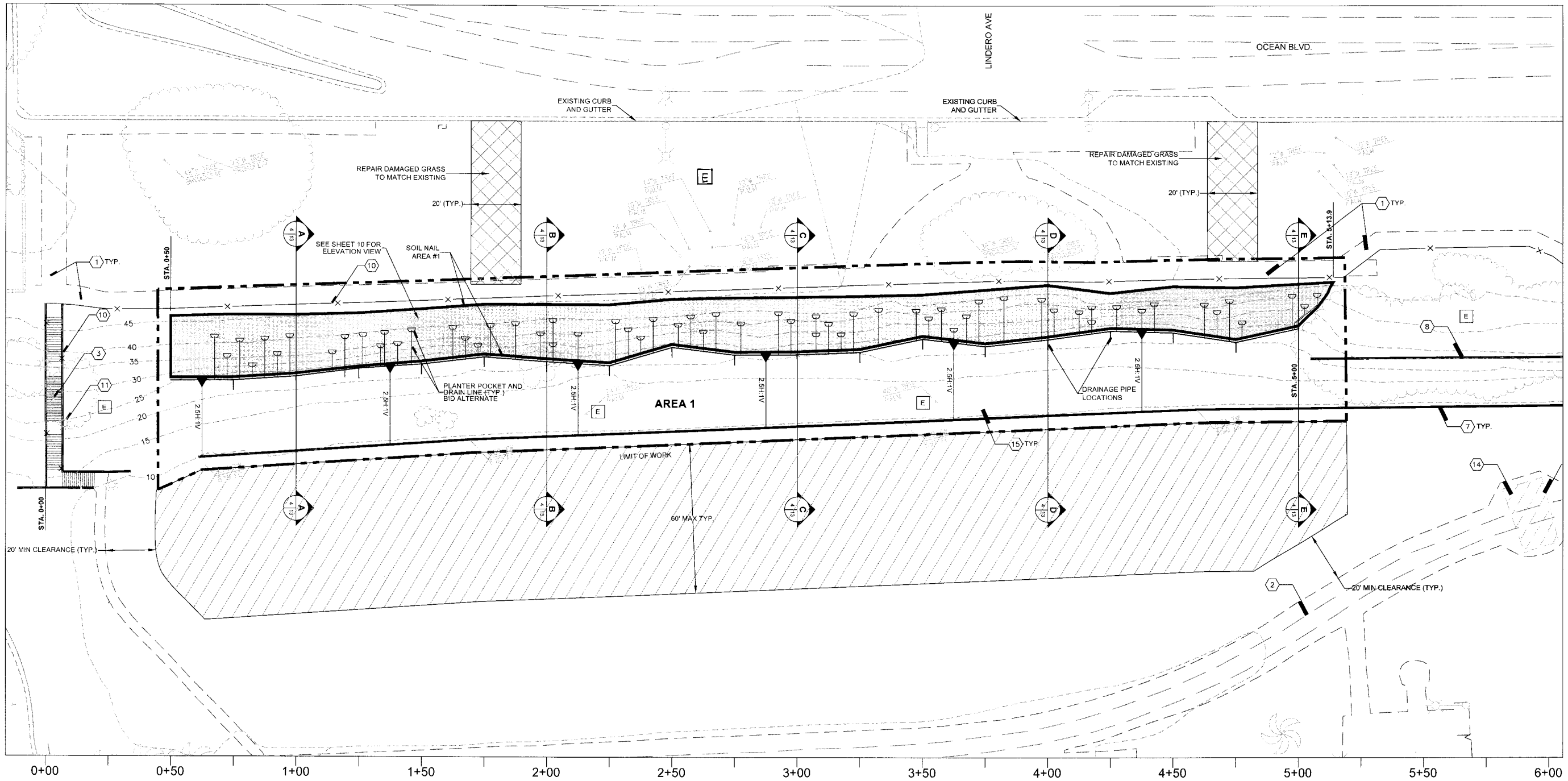

SOIL NAIL GENERAL NOTES:

1. CONTRACTOR TO PROVIDE ROUTE PLAN FOR CONSTRUCTION OF SOIL NAIL AREAS FOR REVIEW AND APPROVAL BY THE CITY PRIOR TO CONSTRUCTION.
2. CONTRACTOR TO PROVIDE TRAFFIC PLAN FOR SHOTCRETE AND CONCRETE DELIVERY FOR REVIEW AND APPROVAL BY THE CITY PRIOR TO CONSTRUCTION.
3. CONTRACTOR TO PROVIDE SAFETY PLAN (FENCING AND SIGNAGE) FOR ALL CONSTRUCTION ACTIVITIES FOR REVIEW AND APPROVAL BY THE CITY.
4. CONTRACTOR TO PROVIDE PLAN WHERE POTABLE WATER WILL BE OBTAINED FOR REVIEW AND APPROVAL BY THE CITY PRIOR TO CONSTRUCTION.
5. SOIL NAIL EXCAVATION AND GRADING SHALL BE PERFORMED UNDER THE SUPERVISION OF THE CITY ENGINEER AND GEOTECHNICAL ENGINEER.
6. CONTRACTOR TO PROVIDE STAGING, EXCAVATION, AND SCHEDULE FOR SOIL NAIL AREA CONSTRUCTION FOR REVIEW AND APPROVAL BY THE CITY.
7. THE CONTRACTOR SHALL NOT PLACE CONCRETE TRUCKS OR HEAVY EQUIPMENT AT THE TOP OF THE BLUFF WITHOUT THE APPROVAL OF THE CITY ENGINEER. SEE ADDENDUM TO THE GEOTECHNICAL REPORT FOR RECOMMENDATIONS.

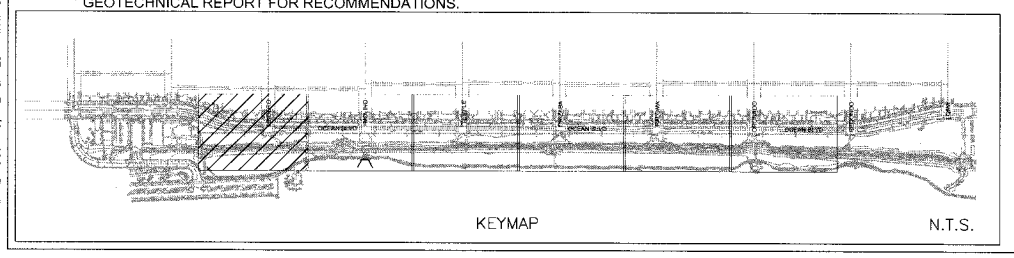

NOTE: CONTRACTOR SHALL SUBMIT FOR REVIEW AND APPROVAL THE REQUIRED DOCUMENTS AT THE PRE-CONSTRUCTION MEETING OR 30 DAYS PRIOR TO SOIL NAIL CONSTRUCTION.

LEGEND

- CONSTRUCT SOIL NAIL AREA PER PROJECT SPECIFICATIONS
- CONSTRUCTION – STAGING AREA
- SHOTCRETE – STAGING AREA
- [E] EXISTING VEGETATION PROTECT–IN–PLACE
- EXISTING GABION WALL
- DRAINAGE PIPES
- REGRADED SLOPE AT 2.5H:1V
- 45 EXISTING TOPOGRAPHIC CONTOUR
- CONSTRUCTION LIMITS

- (1) EXISTING SIDEWALK
- (2) EXISTING BIKE PATH
- (3) EXISTING STAIRS
- (4) EXISTING UTILITY BOXES
- (5) EXISTING TELEPHONE POLE
- (6) EXISTING ELECTRICAL TRANSFORMER
- (7) EXISTING RETAINING WALL
- (8) EXISTING GABION WALL
- (9) EXISTING RAMP
- (10) EXISTING HANDRAIL
- (11) EXISTING LIGHT POLE
- (12) EXISTING CONCRETE CULVERT
- (13) EXISTING SOIL NAIL WALL
- (14) VEHICULAR ACCESS
- (15) EXISTING 2" ø IRRIGATION LINE AT BOTTOM OF SLOPE
- (#) PROTECT IN PLACE

0 20 40
Scale: 1" = 20'

SOIL NAIL CONSTRUCTION SEQUENCE

1. BUILD CONSTRUCTION BERM FROM BEACH SIDE TO ALLOW DRILL RIG ACCESS TO TOP ROW OF SOIL NAILS. IMPORTED SOILS MAYBE REQUIRED DEPENDING ON CONSTRUCTION SEQUENCING, REACH OF DRILL RIG, AND WIDTH OF BENCH REQUIRED.
2. PROTECT EXISTING UTILITY LINES AT BASE OF SLOPE. SEE SHEETS 30-34 FOR EXISTING UTILITY LOCATIONS.
3. CONSTRUCTION BERMING SHALL BE LIMITED TO NO MORE THAN TWO SOIL NAIL AREAS CONCURRENTLY.
4. TEMPORARILY RELOCATE AND IRRIGATE EXISTING TREES BELOW SOIL NAIL AREAS AFFECTED BY CONSTRUCTION BERMING AND REINSTALL/REPLANT PRIOR TO END OF CONSTRUCTION.
5. INSTALL FIRST ROW OF SOIL NAILS, GEOCOMPOSITE DRAINAGE STRIPS, AND CONSTRUCTION FACING.
6. AFTER CONSTRUCTION FACING SHOTCRETE HAS REACHED 50% OF THE 28 DAY DESIGN STRENGTH, INSTALL THE SECOND ROW OF SOIL NAILS, GEOCOMPOSITE DRAINAGE STRIPS, AND CONSTRUCTION FACING.
7. REPEAT CONSTRUCTION SEQUENCE TO THE BASE OF THE WALL, EXCAVATE SOIL AS REQUIRED TO INSTALL SOIL NAILS, INSTALLING WEEP HOLES AT BASE TIGHT LINED TO PVC HEADER PIPE.
8. REGRADE SLOPE AT BASE OF WALL TO 2.5H:1V AND INSTALL DRAINAGE OUT FALL PIPES.

KLEINFELDER
Bright People. Right Solutions.
620 West 16th Street
Long Beach, CA 90813
www.kleinfelder.com PH. 562-432-1696 FAX. 562-432-1796

SN–1.0

REVISIONS

No.	DATE	SHEET	APPROVAL	DESCRIPTION

DESIGNED BY: RDL/KLF
DRAWN BY: JJS/KLF
DESIGN CHECK BY: DMC/KLF
DRAFTING CHECK BY: RDL/KLF
AS–BUILT:
REF. DWG. B–4506

REGISTERED PROFESSIONAL ENGINEER — RAUL Z. P. SIERRA — No. C 56925 — CIVIL — STATE OF CALIFORNIA

OCEAN BOULEVARD EROSION AND ENHANCEMENT PROJECT, PHASE 2
PLAN VIEWS STA. 0+00 TO STA. 6+00

GRAPHIC SCALE 0 1 2 3
PAGE N/A
FIELD BOOK N/A

NO. R– 6959
JOB NO. PW8260 13
SHEET 4 OF 44
DRAWING NO. B–4562

LAST SAVED BY: jstewart
PLOT DATE: Oct 16, 12 SAVED PATH: G:\124406_Long Beach Bluffs\100% Submittal

MATCHLINE STATION 6+00

MATCHLINE STATION 12+00

MOLINO AVE

OCEAN BLVD.

EXISTING CURB AND GUTTER

EXISTING CURB AND GUTTER

EXISTIN AND

TYP. 11

TYP. 7

TYP. 7

TYP 7

EXISTING STORMWATER ENERGY DISSIPATER

TYP 2

EXISTING STORMWATER OUTFALL

6+00 6+50 7+00 7+50 8+00 8+50 9+00 9+50 10+00 10+50 11+00 11+50 12+00

FOR REFERENCE ONLY

LEGEND

- CONSTRUCT SOIL NAIL AREA PER PROJECT SPECIFICATIONS
- CONSTRUCTION – STAGING AREA
- SHOTCRETE – STAGING AREA
- [E] EXISTING VEGETATION PROTECT-IN-PLACE
- EXISTING GABION WALL
- DRAINAGE PIPES
- REGRADED SLOPE AT 2.5H:1V
- 45 EXISTING TOPOGRAPHIC CONTOUR
- CONSTRUCTION LIMITS

1. EXISTING SIDEWALK
2. EXISTING BIKE PATH
3. EXISTING STAIRS
4. EXISTING UTILITY BOXES
5. EXISTING TELEPHONE POLE
6. EXISTING ELECTRICAL TRANSFORMER
7. EXISTING RETAINING WALL
8. EXISTING GABION WALL
9. EXISTING RAMP
10. EXISTING HANDRAIL
11. EXISTING LIGHT POLE
12. EXISTING CONCRETE CULVERT
13. EXISTING SOIL NAIL WALL
14. VEHICULAR ACCESS
15. EXISTING 2" ø IRRIGATION LINE AT BOTTOM OF SLOPE
- # PROTECT IN PLACE

0 20 40
Scale: 1" = 20'

KEYMAP N.T.S.

LAST SAVED BY: jstewart
PLOT DATE: Oct. 18, 12 SAVED PATH: G:\124406_Long Beach Bluffs\100% Submittal

REVISIONS			
No.	DATE	SHEET	APPROVAL

DESCRIPTION

AS-BUILT:

REF. DWG. B-4506

DESIGNED BY: RDL/KLF
DRAWN BY: JJS/KLF
DESIGN CHECK BY: DMC/KLF
DRAFTING CHECK BY: RDL/KLF

REGISTERED PROFESSIONAL ENGINEER MARIUSZ P. SIERADZKI No. C 66925 CIVIL STATE OF CALIFORNIA

OCEAN BOULEVARD EROSION AND ENHANCEMENT PROJECT, PHASE 2 PLAN VIEWS STA. 6+00 TO STA. 12+00

GRAPHIC SCALE 0 1 2 3

PAGE N/A

FIELD BOOK N/A

NO. R- 6959

JOB NO. PW8260 13

SHEET 5 OF 44

DRAWING NO. B-4562

KLEINFELDER
Bright People. Right Solutions.
520 West 16th Street
Long Beach, CA 90813
www.kleinfelder.com PH. 562-432-1696 FAX. 562-432-1796

SN-1.1

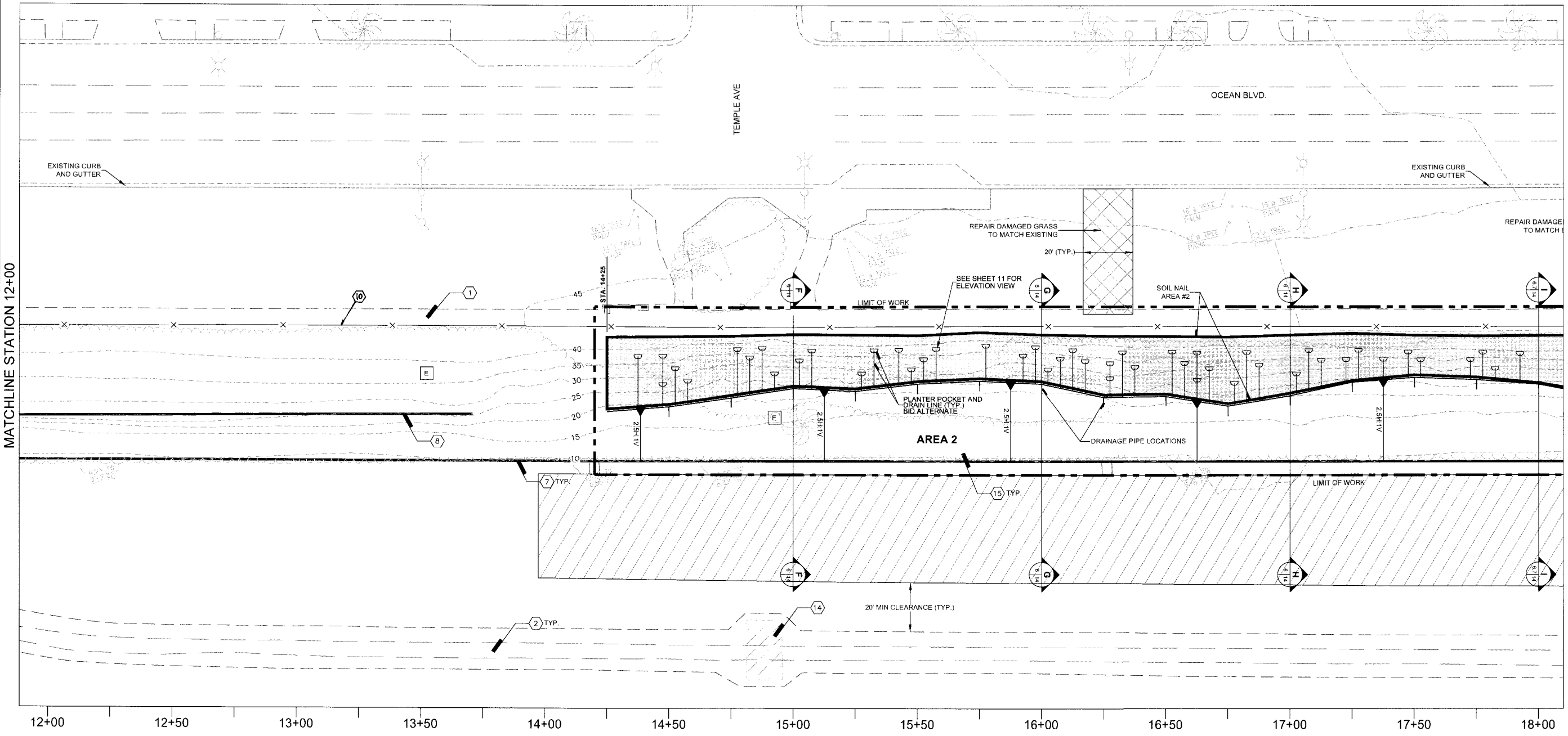

SOIL NAIL GENERAL NOTES:

1. CONTRACTOR TO PROVIDE ROUTE PLAN FOR CONSTRUCTION OF SOIL NAIL AREAS FOR REVIEW AND APPROVAL BY THE CITY PRIOR TO CONSTRUCTION.
2. CONTRACTOR TO PROVIDE TRAFFIC PLAN FOR SHOTCRETE AND CONCRETE DELIVERY FOR REVIEW AND APPROVAL BY THE CITY PRIOR TO CONSTRUCTION.
3. CONTRACTOR TO PROVIDE SAFETY PLAN (FENCING AND SIGNAGE) FOR ALL CONSTRUCTION ACTIVITIES FOR REVIEW AND APPROVAL BY THE CITY.
4. CONTRACTOR TO PROVIDE PLAN WHERE POTABLE WATER WILL BE OBTAINED FOR REVIEW AND APPROVAL BY THE CITY PRIOR TO CONSTRUCTION.
5. SOIL NAIL EXCAVATION AND GRADING SHALL BE PERFORMED UNDER THE SUPERVISION OF THE CITY ENGINEER AND GEOTECHNICAL ENGINEER.
6. CONTRACTOR TO PROVIDE STAGING, EXCAVATION, AND SCHEDULE FOR SOIL NAIL AREA CONSTRUCTION FOR REVIEW AND APPROVAL BY THE CITY.
7. THE CONTRACTOR SHALL NOT PLACE CONCRETE TRUCKS OR HEAVY EQUIPMENT AT THE TOP OF THE BLUFF WITHOUT THE APPROVAL OF THE CITY ENGINEER. SEE ADDENDUM TO THE GEOTECHNICAL REPORT FOR RECOMMENDATIONS.

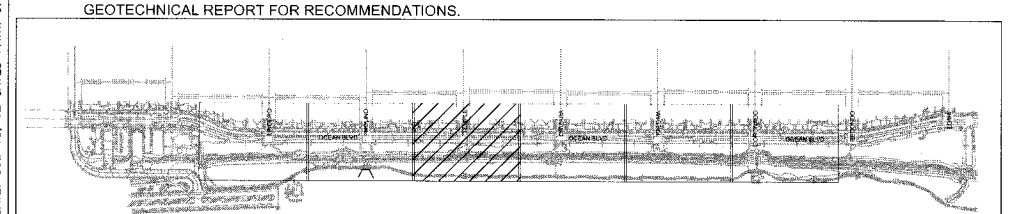

KEYMAP N.T.S.

NOTE: CONTRACTOR SHALL SUBMIT FOR REVIEW AND APPROVAL THE REQUIRED DOCUMENTS AT THE PRE-CONSTRUCTION MEETING OR 30 DAYS PRIOR TO SOIL NAIL CONSTRUCTION.

LEGEND

- CONSTRUCT SOIL NAIL AREA PER PROJECT SPECIFICATIONS
- CONSTRUCTION – STAGING AREA
- SHOTCRETE – STAGING AREA
- [E] EXISTING VEGETATION PROTECT-IN-PLACE
- EXISTING GABION WALL
- DRAINAGE PIPES
- REGRADED SLOPE AT 2.5H:1V
- 45 EXISTING TOPOGRAPHIC CONTOUR
- CONSTRUCTION LIMITS

(1) EXISTING SIDEWALK
(2) EXISTING BIKE PATH
(3) EXISTING STAIRS
(4) EXISTING UTILITY BOXES
(5) EXISTING TELEPHONE POLE
(6) EXISTING ELECTRICAL TRANSFORMER
(7) EXISTING RETAINING WALL
(8) EXISTING GABION WALL
(9) EXISTING RAMP
(10) EXISTING HANDRAIL
(11) EXISTING LIGHT POLE
(12) EXISTING CONCRETE CULVERT
(13) EXISTING SOIL NAIL WALL
(14) VEHICULAR ACCESS
(15) EXISTING 2" ø IRRIGATION LINE AT BOTTOM OF SLOPE
(#) PROTECT IN PLACE

0 20 40
Scale: 1" = 20'

SOIL NAIL CONSTRUCTION SEQUENCE

1. BUILD CONSTRUCTION BERM FROM BEACH SIDE TO ALLOW DRILL RIG ACCESS TO TOP ROW OF SOIL NAILS. IMPORTED SOILS MAYBE REQUIRED DEPENDING ON CONSTRUCTION SEQUENCING, REACH OF DRILL RIG, AND WIDTH OF BENCH REQUIRED.
2. PROTECT EXISTING UTILITY LINES AT BASE OF SLOPE. SEE SHEETS 30-34 FOR EXISTING UTILITY LOCATIONS.
3. CONSTRUCTION BERMING SHALL BE LIMITED TO NO MORE THAN TWO SOIL NAIL AREAS CONCURRENTLY.
4. TEMPORARILY RELOCATE AND IRRIGATE EXISTING TREES BELOW SOIL NAIL AREAS AFFECTED BY CONSTRUCTION BERMING AND REINSTALL/REPLANT PRIOR TO END OF CONSTRUCTION.
5. INSTALL FIRST ROW OF SOIL NAILS, GEOCOMPOSITE DRAINAGE STRIPS, AND CONSTRUCTION FACING.
6. AFTER CONSTRUCTION FACING SHOTCRETE HAS REACHED 50% OF THE 28 DAY DESIGN STRENGTH, INSTALL THE SECOND ROW OF SOIL NAILS, GEOCOMPOSITE DRAINAGE STRIPS, AND CONSTRUCTION FACING.
7. REPEAT CONSTRUCTION SEQUENCE TO THE BASE OF THE WALL, EXCAVATE SOIL AS REQUIRED TO INSTALL SOIL NAILS, INSTALLING WEEP HOLES AT BASE TIGHT LINED TO PVC HEADER PIPE.
8. REGRADE SLOPE AT BASE OF WALL TO 2.5H:1V AND INSTALL DRAINAGE OUT FALL PIPES.

REVISIONS

No.	DATE	SHEET	APPROVAL	DESCRIPTION
				AS-BUILT:

REF. DWG: B-4506

DESIGNED BY: RDL/KLF
DRAWN BY: JJS/KLF
DESIGN CHECK BY: DMC/KLF
DRAFTING CHECK BY: RDL/KLF

PROFESSIONAL ENGINEER * ROBERT D. SIERADZKI * No. C 68929 * CIVIL * STATE OF CALIFORNIA

OCEAN BOULEVARD EROSION AND ENHANCEMENT PROJECT, PHASE 2 PLAN VIEWS STA. 12+00 TO STA. 18+00

GRAPHIC SCALE 0 1 2 3
PAGE N/A
FIELD BOOK N/A

NO. R- 6959
JOB NO. PW8260 13
SHEET 6 OF 44
DRAWING NO. B-4562

KLEINFELDER
Bright People. Right Solutions.
620 West 16th Street
Long Beach, CA 90813
www.kleinfelder.com PH. 562-432-1696 FAX 562-432-1796

SN-1.2

LAST SAVED BY: jstewart
PLOT DATE: Oct. 18, 12 SAVED PATH: G:\124406_Long Beach Bluffs\100% Submittal

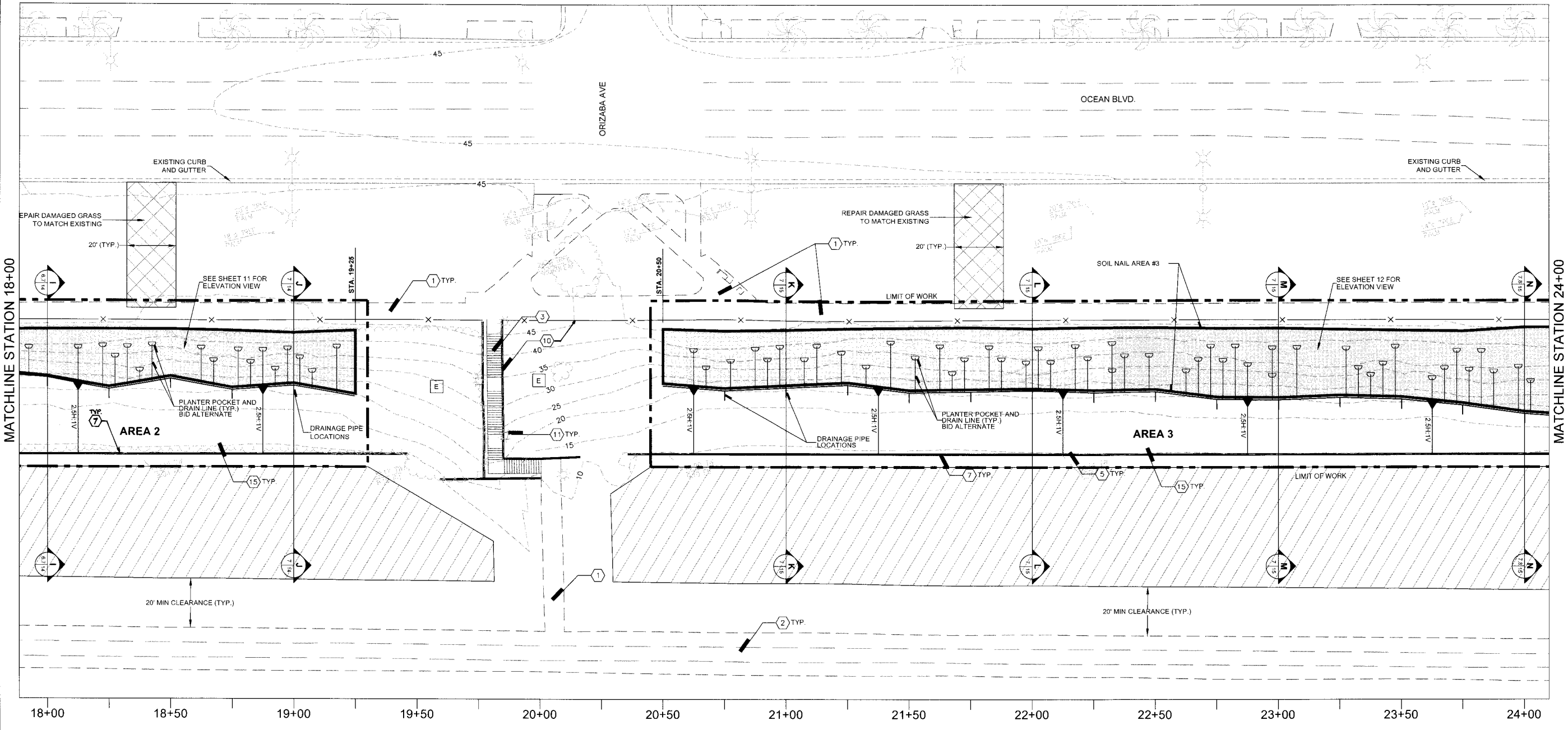

SOIL NAIL GENERAL NOTES:

1. CONTRACTOR TO PROVIDE ROUTE PLAN FOR CONSTRUCTION OF SOIL NAIL AREAS FOR REVIEW AND APPROVAL BY THE CITY PRIOR TO CONSTRUCTION.
2. CONTRACTOR TO PROVIDE TRAFFIC PLAN FOR SHOTCRETE AND CONCRETE DELIVERY FOR REVIEW AND APPROVAL BY THE CITY PRIOR TO CONSTRUCTION.
3. CONTRACTOR TO PROVIDE SAFETY PLAN (FENCING AND SIGNAGE) FOR ALL CONSTRUCTION ACTIVITIES FOR REVIEW AND APPROVAL BY THE CITY.
4. CONTRACTOR TO PROVIDE PLAN WHERE POTABLE WATER WILL BE OBTAINED FOR REVIEW AND APPROVAL BY THE CITY PRIOR TO CONSTRUCTION.
5. SOIL NAIL EXCAVATION AND GRADING SHALL BE PERFORMED UNDER THE SUPERVISION OF THE CITY ENGINEER AND GEOTECHNICAL ENGINEER.
6. CONTRACTOR TO PROVIDE STAGING, EXCAVATION, AND SCHEDULE FOR SOIL NAIL AREA CONSTRUCTION FOR REVIEW AND APPROVAL BY THE CITY.
7. THE CONTRACTOR SHALL NOT PLACE CONCRETE TRUCKS OR HEAVY EQUIPMENT AT THE TOP OF THE BLUFF WITHOUT THE APPROVAL OF THE CITY ENGINEER. SEE ADDENDUM TO THE GEOTECHNICAL REPORT FOR RECOMMENDATIONS.

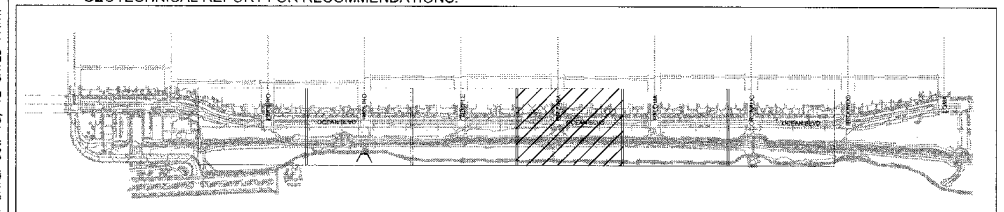

NOTE: CONTRACTOR SHALL SUBMIT FOR REVIEW AND APPROVAL THE REQUIRED DOCUMENTS AT THE PRE-CONSTRUCTION MEETING OR 30 DAYS PRIOR TO SOIL NAIL CONSTRUCTION.

LEGEND

- CONSTRUCT SOIL NAIL AREA PER PROJECT SPECIFICATIONS
- CONSTRUCTION – STAGING AREA
- SHOTCRETE – STAGING AREA
- E — EXISTING VEGETATION PROTECT-IN-PLACE
- EXISTING GABION WALL
- DRAINAGE PIPES
- REGRADED SLOPE AT 2.5H:1V
- 45 — EXISTING TOPOGRAPHIC CONTOUR
- CONSTRUCTION LIMITS

(1) EXISTING SIDEWALK
(2) EXISTING BIKE PATH
(3) EXISTING STAIRS
(4) EXISTING UTILITY BOXES
(5) EXISTING TELEPHONE POLE
(6) EXISTING ELECTRICAL TRANSFORMER
(7) EXISTING RETAINING WALL
(8) EXISTING GABION WALL
(9) EXISTING RAMP
(10) EXISTING HANDRAIL
(11) EXISTING LIGHT POLE
(12) EXISTING CONCRETE CULVERT
(13) EXISTING SOIL NAIL WALL
(14) VEHICULAR ACCESS
(15) EXISTING 2" ø IRRIGATION LINE AT BOTTOM OF SLOPE
(#) PROTECT IN PLACE

0 20 40
Scale: 1" = 20'

SOIL NAIL CONSTRUCTION SEQUENCE

1. BUILD CONSTRUCTION BERM FROM BEACH SIDE TO ALLOW DRILL RIG ACCESS TO TOP ROW OF SOIL NAILS. IMPORTED SOILS MAYBE REQUIRED DEPENDING ON CONSTRUCTION SEQUENCING, REACH OF DRILL RIG, AND WIDTH OF BENCH REQUIRED.
2. PROTECT EXISTING UTILITY LINES AT BASE OF SLOPE. SEE SHEETS 30-34 FOR EXISTING UTILITY LOCATIONS.
3. CONSTRUCTION BERMING SHALL BE LIMITED TO NO MORE THAN TWO SOIL NAIL AREAS CONCURRENTLY.
4. TEMPORARILY RELOCATE AND IRRIGATE EXISTING TREES BELOW SOIL NAIL AREAS AFFECTED BY CONSTRUCTION BERMING AND REINSTALL/REPLANT PRIOR TO END OF CONSTRUCTION.
5. INSTALL FIRST ROW OF SOIL NAILS, GEOCOMPOSITE DRAINAGE STRIPS, AND CONSTRUCTION FACING.
6. AFTER CONSTRUCTION FACING SHOTCRETE HAS REACHED 50% OF THE 28 DAY DESIGN STRENGTH, INSTALL THE SECOND ROW OF SOIL NAILS, GEOCOMPOSITE DRAINAGE STRIPS, AND CONSTRUCTION FACING.
7. REPEAT CONSTRUCTION SEQUENCE TO THE BASE OF THE WALL, EXCAVATE SOIL AS REQUIRED TO INSTALL SOIL NAILS, INSTALLING WEEP HOLES AT BASE TIGHT LINED TO PVC HEADER PIPE.
8. REGRADE SLOPE AT BASE OF WALL TO 2.5H:1V AND INSTALL DRAINAGE OUT FALL PIPES.

No.	DATE	SHEET	APPROVAL	DESCRIPTION

AS-BUILT:

REF. DWG. B-4506

DESIGNED BY: RDL/KLF
DRAWN BY: JJS/KLF
DESIGN CHECK BY: DMC/KLF
DRAFTING CHECK BY: RDL/KLF

REGISTERED PROFESSIONAL ENGINEER MARIUSZ P. SIERADZKI No. C 69925 CIVIL STATE OF CALIFORNIA

OCEAN BOULEVARD EROSION AND ENHANCEMENT PROJECT, PHASE 2
PLAN VIEWS STA. 18+00 TO STA. 24+00

GRAPHIC SCALE 0 1 2 3
PAGE N/A
FIELD BOOK N/A

NO. R- 6959

JOB NO. PW8260 13

SHEET 7 OF 44

DRAWING NO. B-4562

KLEINFELDER
Bright People. Right Solutions.
620 West 16th Street
Long Beach, CA 90813
www.kleinfelder.com PH. 562-432-1696 FAX 562-432-1796

SN-1.3

LAST SAVED BY: jstewart
PLOT DATE: Oct. 18, 12 SAVED PATH: G:\124406_Long Beach Bluffs\100% Submittal

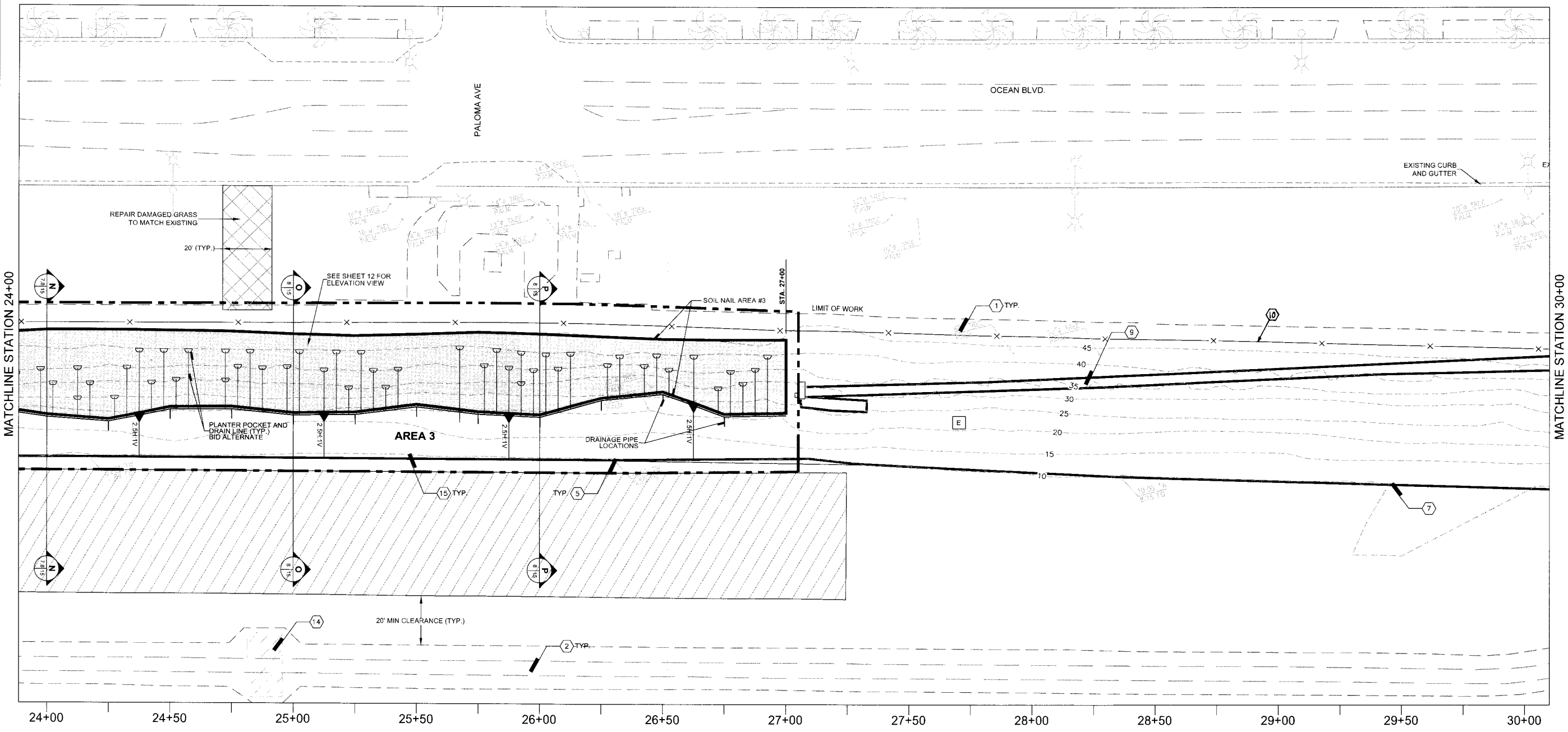

SOIL NAIL GENERAL NOTES:

1. CONTRACTOR TO PROVIDE ROUTE PLAN FOR CONSTRUCTION OF SOIL NAIL AREAS FOR REVIEW AND APPROVAL BY THE CITY PRIOR TO CONSTRUCTION.
2. CONTRACTOR TO PROVIDE TRAFFIC PLAN FOR SHOTCRETE AND CONCRETE DELIVERY FOR REVIEW AND APPROVAL BY THE CITY PRIOR TO CONSTRUCTION.
3. CONTRACTOR TO PROVIDE SAFETY PLAN (FENCING AND SIGNAGE) FOR ALL CONSTRUCTION ACTIVITIES FOR REVIEW AND APPROVAL BY THE CITY.
4. CONTRACTOR TO PROVIDE PLAN WHERE POTABLE WATER WILL BE OBTAINED FOR REVIEW AND APPROVAL BY THE CITY PRIOR TO CONSTRUCTION.
5. SOIL NAIL EXCAVATION AND GRADING SHALL BE PERFORMED UNDER THE SUPERVISION OF THE CITY ENGINEER AND GEOTECHNICAL ENGINEER.
6. CONTRACTOR TO PROVIDE STAGING, EXCAVATION, AND SCHEDULE FOR SOIL NAIL AREA CONSTRUCTION FOR REVIEW AND APPROVAL BY THE CITY.
7. THE CONTRACTOR SHALL NOT PLACE CONCRETE TRUCKS OR HEAVY EQUIPMENT AT THE TOP OF THE BLUFF WITHOUT THE APPROVAL OF THE CITY ENGINEER. SEE ADDENDUM TO THE GEOTECHNICAL REPORT FOR RECOMMENDATIONS.

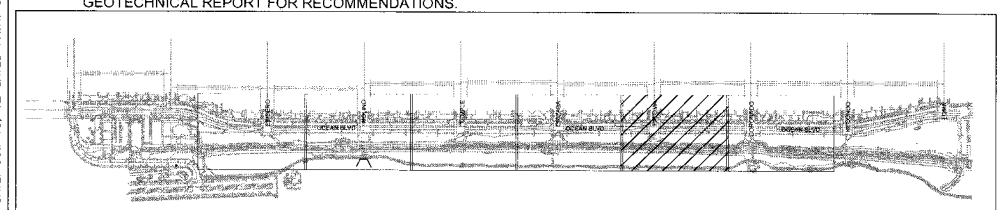

NOTE: CONTRACTOR SHALL SUBMIT FOR REVIEW AND APPROVAL THE REQUIRED DOCUMENTS AT THE PRE-CONSTRUCTION MEETING OR 30 DAYS PRIOR TO SOIL NAIL CONSTRUCTION.

LEGEND

- CONSTRUCT SOIL NAIL AREA PER PROJECT SPECIFICATIONS
- CONSTRUCTION -- STAGING AREA
- SHOTCRETE -- STAGING AREA
- E — EXISTING VEGETATION PROTECT-IN-PLACE
- EXISTING GABION WALL
- DRAINAGE PIPES
- REGRADED SLOPE AT 2.5H:1V
- 45 — EXISTING TOPOGRAPHIC CONTOUR
- CONSTRUCTION LIMITS

1. EXISTING SIDEWALK
2. EXISTING BIKE PATH
3. EXISTING STAIRS
4. EXISTING UTILITY BOXES
5. EXISTING TELEPHONE POLE
6. EXISTING ELECTRICAL TRANSFORMER
7. EXISTING RETAINING WALL
8. EXISTING GABION WALL
9. EXISTING RAMP
10. EXISTING HANDRAIL
11. EXISTING LIGHT POLE
12. EXISTING CONCRETE CULVERT
13. EXISTING SOIL NAIL WALL
14. VEHICULAR ACCESS
15. EXISTING 2" ø IRRIGATION LINE AT BOTTOM OF SLOPE
- # PROTECT IN PLACE

0 20 40
Scale: 1" = 20'

SOIL NAIL CONSTRUCTION SEQUENCE

1. BUILD CONSTRUCTION BERM FROM BEACH SIDE TO ALLOW DRILL RIG ACCESS TO TOP ROW OF SOIL NAILS. IMPORTED SOILS MAYBE REQUIRED DEPENDING ON CONSTRUCTION SEQUENCING, REACH OF DRILL RIG, AND WIDTH OF BENCH REQUIRED.
2. PROTECT EXISTING UTILITY LINES AT BASE OF SLOPE. SEE SHEETS 30-34 FOR EXISTING UTILITY LOCATIONS.
3. CONSTRUCTION BERMING SHALL BE LIMITED TO NO MORE THAN TWO SOIL NAIL AREAS CONCURRENTLY.
4. TEMPORARILY RELOCATE AND IRRIGATE EXISTING TREES BELOW SOIL NAIL AREAS AFFECTED BY CONSTRUCTION BERMING AND REINSTALL/REPLANT PRIOR TO END OF CONSTRUCTION.
5. INSTALL FIRST ROW OF SOIL NAILS, GEOCOMPOSITE DRAINAGE STRIPS, AND CONSTRUCTION FACING.
6. AFTER CONSTRUCTION FACING SHOTCRETE HAS REACHED 50% OF THE 28 DAY DESIGN STRENGTH, INSTALL THE SECOND ROW OF SOIL NAILS, GEOCOMPOSITE DRAINAGE STRIPS, AND CONSTRUCTION FACING.
7. REPEAT CONSTRUCTION SEQUENCE TO THE BASE OF THE WALL, EXCAVATE SOIL AS REQUIRED TO INSTALL SOIL NAILS, INSTALLING WEEP HOLES AT BASE TIGHT LINED TO PVC HEADER PIPE.
8. REGRADE SLOPE AT BASE OF WALL TO 2.5H:1V AND INSTALL DRAINAGE OUT FALL PIPES.

KLEINFELDER
Bright People. Right Solutions.
620 West 16th Street
Long Beach, CA 90813
www.kleinfelder.com PH. 562-432-1696 FAX. 562-432-1796

SN-1.4

REVISIONS

No.	DATE	SHEET	APPROVAL	DESCRIPTION

DESIGNED BY: RDL/KLF
DRAWN BY: JJS/KLF
DESIGN CHECK BY: DMC/KLF
DRAFTING CHECK BY: RDL/KLF
AS-BUILT:
REF. DWG. B-4506

ENGINEER'S SEAL — REGISTERED PROFESSIONAL ENGINEER — MAXIMILIAN P. SIERADZKI — No. C 66075 — CIVIL — STATE OF CALIFORNIA

OCEAN BOULEVARD EROSION AND ENHANCEMENT PROJECT, PHASE 2
PLAN VIEWS STA. 24+00 TO STA. 30+00

GRAPHIC SCALE 0 1 2 3
PAGE N/A
FIELD BOOK N/A

NO. R- 6959
JOB NO. PW8260 13
SHEET 8 OF 44
DRAWING NO. B-4562

LAST SAVED BY: jstewart
PLOT DATE: Oct. 18, 12 SAVED PATH: G:\124406_Long Beach Bluffs\100% Submittal

MATCHLINE STATION 30+00

CORONADO AVE

OCEAN BLVD.

EXISTING CURB AND GUTTER

EXISTING CURB AND GUTTER

45
40
TYP. (11)
35
30
25
20
15
10

(3)
(10)
(9)
(1)
(10)
(8)
TYP. (7)
TYP. (5)
(7)
(14)
(2) TYP.

30+00 30+50 31+00 31+50 32+00 32+50 33+00 33+50 34+00 34+50 35+00 35+50 36+00

FOR REFERENCE ONLY

LEGEND

- CONSTRUCT SOIL NAIL AREA PER PROJECT SPECIFICATIONS
- CONSTRUCTION – STAGING AREA
- SHOTCRETE – STAGING AREA
- [E] EXISTING VEGETATION PROTECT-IN-PLACE
- EXISTING GABION WALL
- DRAINAGE PIPES
- REGRADED SLOPE AT 2.5H:1V
- 45 EXISTING TOPOGRAPHIC CONTOUR
- CONSTRUCTION LIMITS

(1) EXISTING SIDEWALK
(2) EXISTING BIKE PATH
(3) EXISTING STAIRS
(4) EXISTING UTILITY BOXES
(5) EXISTING TELEPHONE POLE
(6) EXISTING ELECTRICAL TRANSFORMER
(7) EXISTING RETAINING WALL
(8) EXISTING GABION WALL
(9) EXISTING RAMP
(10) EXISTING HANDRAIL
(11) EXISTING LIGHT POLE
(12) EXISTING CONCRETE CULVERT
(13) EXISTING SOIL NAIL WALL
(14) VEHICULAR ACCESS
(15) EXISTING 2" ø IRRIGATION LINE AT BOTTOM OF SLOPE
(#) PROTECT IN PLACE

0 20 40
Scale: 1" = 20'

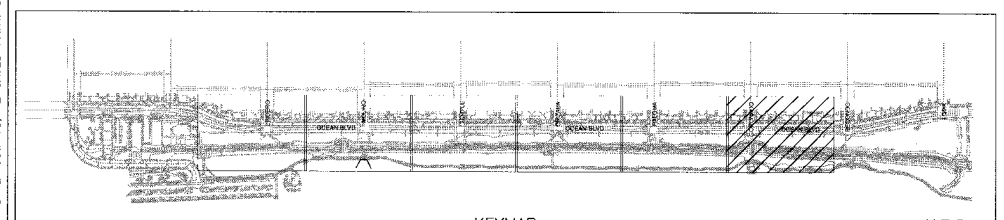

KEYMAP N.T.S.

LAST SAVED BY: jstewart
PLOT DATE: Oct. 18, 12 SAVED PATH: G:\124406_Long Beach Bluffs\100% Submittal

REVISIONS				DESIGNED BY: RDL/KLF
No.	DATE	SHEET	APPROVAL	DESCRIPTION
				DRAWN BY: JJS/KLF
				DESIGN CHECK BY: DMC/KLF
				DRAFTING CHECK BY: RDL/KLF
				AS-BUILT:

REGISTERED PROFESSIONAL ENGINEER RAFAEL P. SIERADZKI No. C 56925 CIVIL STATE OF CALIFORNIA

OCEAN BOULEVARD EROSION AND ENHANCEMENT PROJECT, PHASE 2 PLAN VIEWS STA. 30+00 TO STA. 36+00

REF. DWG. B-4506

GRAPHIC SCALE 0 1 2 3

PAGE N/A

FIELD BOOK N/A

NO. R- 6959

JOB NO. PW8260 13

SHEET 9 OF 44

DRAWING NO. B-4562

KLEINFELDER
Bright People. Right Solutions.
620 West 16th Street
Long Beach, CA 90813
PH. 562-432-1696 FAX. 562-432-1796
www.kleinfelder.com

SN-1.5

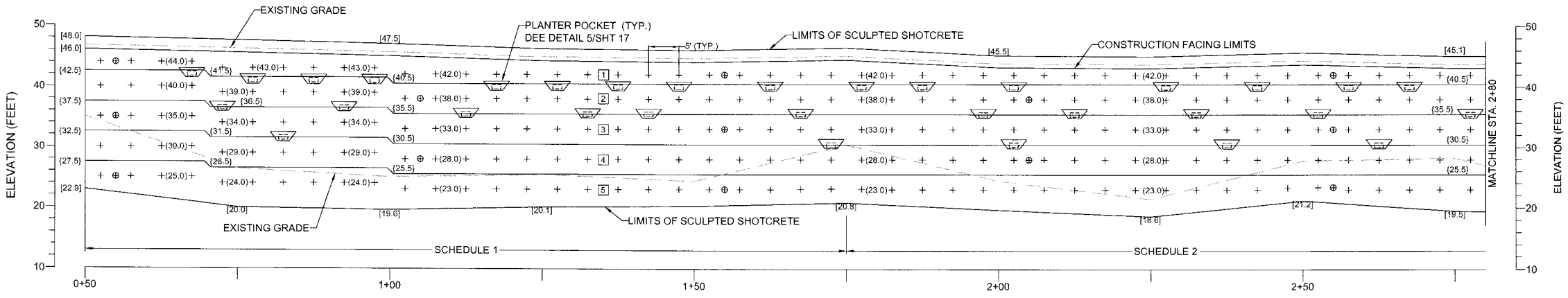

1 / 9 **WALL 1 ELEVATION VIEW**

SCALE IN FEET

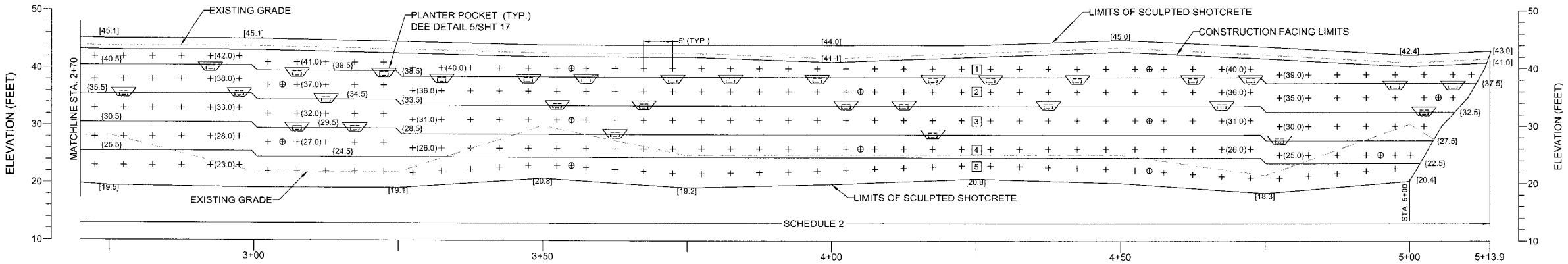

1 / 9 **WALL 1 ELEVATION VIEW**

SCALE IN FEET

SOIL NAIL TESTING NOTES:

1. PROVIDE SACRIFICIAL TEST NAILS AT THE LOCATIONS SHOWN ON THE PLANS.
2. THE TEST NAILS SHALL BE 20 FEET IN TOTAL LENGTH WITH A 15 FOOT BONDED ZONE AND 5 FOOT UNBONDED ZONE.
3. THE TEST NAILS SHALL BE INSTALLED USING THE SAME MEANS AND METHODS AS THE PRODUCTION NAILS.
4. VERIFICATION AND PROOF TESTING SHALL BE CONDUCTED IN ACCORDANCE WITH SPECIFICATION 03361.
5. VERIFICATION 200% LOAD = 2 X 1.35 KIPS/FT X 15 FT = 40.5 KIPS
6. PROOF 150% LOAD = 1.5 X 1.35 KIPS/FT X 15 FT = 30.4 KIPS
7. FAILED TEST RESULTS SHALL BE REPORTED TO THE GEOTECHNICAL ENGINEER WITHIN 24 HOURS.

LEGEND

- [1] - SOIL NAIL / TIEBACK ROW
- \+ -SOIL NAIL
- -PLANTER POCKET
- (379) - SOIL NAIL / TIEBACK ROW ELEVATION (PROPOSED)
- {376} - SHOTCRETE JOINT ELEVATION (PROPOSED)
- [381.0] - GRADE ELEVATION (PROPOSED)
- ROW - SOIL NAIL / TIEBACK ROW NUMBER
- L - DRILLED NAIL LENGTH (FEET)
- BAR - NAIL BAR SIZE
- GRADE- NAIL BAR STEEL GRADE (Fy)
- α - NAIL DECLINATION (DEGREES) UNLESS SHOWN OTHERWISE ON PLANS
- (15°) - DECLINATION ANGLE OF SPECIFIC NAIL
- A_D - ALLOWABLE DESIGN NAIL PULLOUT RESISTANCE (K/FT)
- ⊕ - TEST NAIL

SOIL NAIL SCHEDULE 1

ROW	L	BAR	GRADE	SPACING	α	A_D
1	14	#9	75	5	30	1.35
2	30	#9	75	5	20	1.35
3	30	#9	75	5	20	1.35
4	30	#9	75	5	20	1.35
5	30	#9	75	5	20	1.35

SOIL NAIL SCHEDULE 2

ROW	L	BAR	GRADE	SPACING	α	A_D
1	30	#9	75	5	20	1.35
2	30	#9	75	5	20	1.35
3	30	#9	75	5	20	1.35
4	30	#9	75	5	20	1.35
5	30	#9	75	5	20	1.35

SOIL NAIL CONSTRUCTION SEQUENCE

1. BUILD CONSTRUCTION BERM FROM BEACH SIDE TO ALLOW DRILL RIG ACCESS TO TOP ROW OF SOIL NAILS. IMPORTED SOILS MAYBE REQUIRED DEPENDING ON CONSTRUCTION SEQUENCING, REACH OF DRILL RIG, AND WIDTH OF BENCH REQUIRED.
2. PROTECT EXISTING UTILITY LINES AT BASE OF SLOPE. SEE SHEETS 30-34 FOR EXISTING UTILITY LOCATIONS.
3. CONSTRUCTION BERMING SHALL BE LIMITED TO NO MORE THAN TWO SOIL NAIL AREAS CONCURRENTLY.
4. INSTALL FIRST ROW OF SOIL NAILS, GEOCOMPOSITE DRAINAGE STRIPS, AND CONSTRUCTION FACING.
5. AFTER CONSTRUCTION FACING SHOTCRETE HAS REACHED 50% OF THE 28 DAY DESIGN STRENGTH, INSTALL THE SECOND ROW OF SOIL NAILS, GEOCOMPOSITE DRAINAGE STRIPS, AND CONSTRUCTION FACING.
6. REPEAT CONSTRUCTION SEQUENCE TO THE BASE OF THE WALL, EXCAVATE SOIL AS REQUIRED TO INSTALL SOIL NAILS, INSTALLING WEEP HOLES AT BASE TIGHT LINED TO PVC HEADER PIPE.
7. REGRADE SLOPE AT BASE OF WALL TO 2.5H:1V AND INSTALL DRAINAGE OUT FALL PIPES.

KLEINFELDER
Bright People. Right Solutions.
620 West 16th Street
Long Beach, CA 90813
PH. 562-432-1696 FAX. 562-432-1796
www.kleinfelder.com

SN-2.0

REVISIONS

No.	DATE	SHEET	APPROVAL	DESCRIPTION

DESIGNED BY: RDL/KLF
DRAWN BY: JJS/KLF
DESIGN CHECK BY: DMC/KLF
DRAFTING CHECK BY: RDL/KLF
AS-BUILT:
REF. DWG. B-4506

REGISTERED PROFESSIONAL ENGINEER KAZIMIERZ P. SIERADZKI No. C 58925 CIVIL STATE OF CALIFORNIA

OCEAN BOULEVARD EROSION AND ENHANCEMENT PROJECT, PHASE 2 ELEVATION VIEW SOIL NAIL AREA 1

FIELD BOOK: N/A
PAGE: N/A
GRAPHIC SCALE: 0 1 2 3

NO. R- 6959
JOB NO. PW8260 13
SHEET 10 OF 44
DRAWING NO. B-4562

LAST SAVED BY: jstewart
PLOT DATE: Oct. 18, 12 SAVED PATH: G:\124406_Long Beach Bluffs\100% Submittal

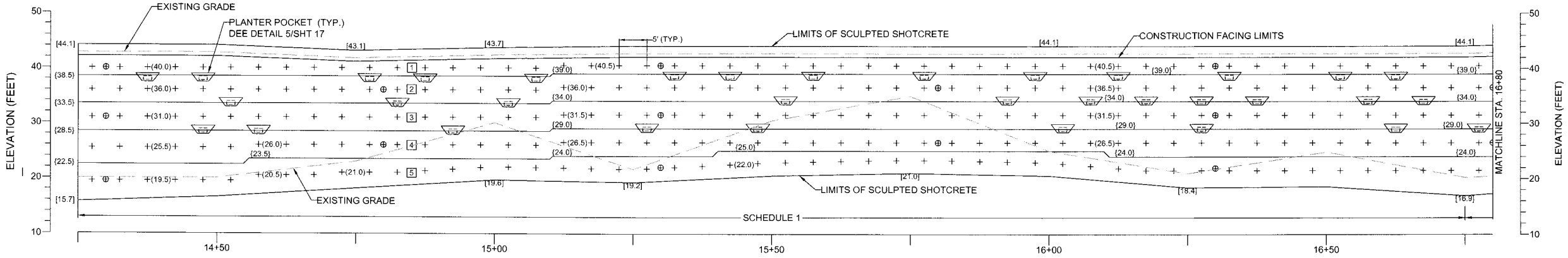

2 : 10 **WALL 2 ELEVATION VIEW**

SCALE IN FEET

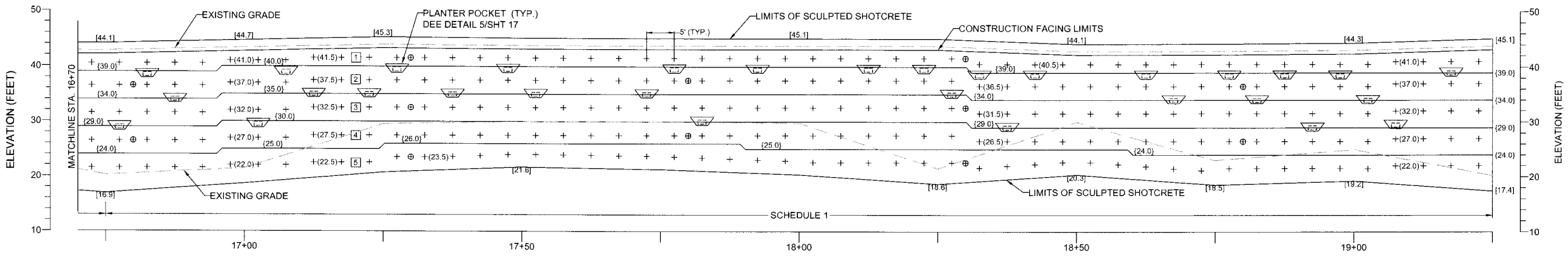

2 : 10 **WALL 2 ELEVATION VIEW**

SCALE IN FEET

SOIL NAIL TESTING NOTES:

1. PROVIDE SACRIFICIAL TEST NAILS AT THE LOCATIONS SHOWN ON THE PLANS.
2. THE TEST NAILS SHALL BE 20 FEET IN TOTAL LENGTH WITH A 15 FOOT BONDED ZONE AND 5 FOOT UNBONDED ZONE.
3. THE TEST NAILS SHALL BE INSTALLED USING THE SAME MEANS AND METHODS AS THE PRODUCTION NAILS.
4. VERIFICATION AND PROOF TESTING SHALL BE CONDUCTED IN ACCORDANCE WITH SPECIFICATION 03361.
5. VERIFICATION 200% LOAD = 2 X 1.35 KIPS/FT X 15 FT = 40.5 KIPS
6. PROOF 150% LOAD = 1.5 X 1.35 KIPS/FT X 15 FT = 30.4 KIPS
7. FAILED TEST RESULTS SHALL BE REPORTED TO THE GEOTECHNICAL ENGINEER WITHIN 24 HOURS.

LEGEND

- [1] - SOIL NAIL / TIEBACK ROW
- \+ -SOIL NAIL
- PLANTER POCKET
- (379) - SOIL NAIL / TIEBACK ROW ELEVATION (PROPOSED)
- {376} - SHOTCRETE JOINT ELEVATION (PROPOSED)
- [381.0] - GRADE ELEVATION (PROPOSED)
- ROW - SOIL NAIL / TIEBACK ROW NUMBER
- L - DRILLED NAIL LENGTH (FEET)
- BAR - NAIL BAR SIZE
- GRADE - NAIL BAR STEEL GRADE (Fy)
- α - NAIL DECLINATION (DEGREES) UNLESS SHOWN OTHERWISE ON PLANS
- (15°) - DECLINATION ANGLE OF SPECIFIC NAIL
- A_D - ALLOWABLE DESIGN NAIL PULLOUT RESISTANCE (K/FT)
- ⊕ - TEST NAIL

SOIL NAIL SCHEDULE 1

ROW	L	BAR	GRADE	SPACING	α	A_D
1	30	#9	75	5	20	1.35
2	30	#9	75	5	20	1.35
3	30	#9	75	5	20	1.35
4	30	#9	75	5	20	1.35
5	30	#9	75	5	20	1.35

SOIL NAIL CONSTRUCTION SEQUENCE

1. BUILD CONSTRUCTION BERM FROM BEACH SIDE TO ALLOW DRILL RIG ACCESS TO TOP ROW OF SOIL NAILS. IMPORTED SOILS MAYBE REQUIRED DEPENDING ON CONSTRUCTION SEQUENCING, REACH OF DRILL RIG, AND WIDTH OF BENCH REQUIRED.
2. PROTECT EXISTING UTILITY LINES AT BASE OF SLOPE. SEE SHEETS 30-34 FOR EXISTING UTILITY LOCATIONS.
3. CONSTRUCTION BERMING SHALL BE LIMITED TO NO MORE THAN TWO SOIL NAIL AREAS CONCURRENTLY.
4. INSTALL FIRST ROW OF SOIL NAILS, GEOCOMPOSITE DRAINAGE STRIPS, AND CONSTRUCTION FACING.
5. AFTER CONSTRUCTION FACING SHOTCRETE HAS REACHED 50% OF THE 28 DAY DESIGN STRENGTH, INSTALL THE SECOND ROW OF SOIL NAILS, GEOCOMPOSITE DRAINAGE STRIPS, AND CONSTRUCTION FACING.
6. REPEAT CONSTRUCTION SEQUENCE TO THE BASE OF THE WALL, EXCAVATE SOIL AS REQUIRED TO INSTALL SOIL NAILS, INSTALLING WEEP HOLES AT BASE TIGHT LINED TO PVC HEADER PIPE.
7. REGRADE SLOPE AT BASE OF WALL TO 2.5H:1V AND INSTALL DRAINAGE OUT FALL PIPES.

REVISIONS

No.	DATE	SHEET	APPROVAL	DESCRIPTION

DESIGNED BY: RDL/KLF
DRAWN BY: JJS/KLF
DESIGN CHECK BY: DMC/KLF
DRAFTING CHECK BY: RDL/KLF
AS-BUILT:
REF. DWG: B-4506

REGISTERED PROFESSIONAL ENGINEER MARK LEE SIEGRADZKI No. C 66925 CIVIL STATE OF CALIFORNIA
12-31-24

OCEAN BOULEVARD EROSION AND ENHANCEMENT PROJECT, PHASE 2 ELEVATION VIEW SOIL NAIL AREA 2

GRAPHIC SCALE 0 1 2 3
PAGE N/A
FIELD BOOK N/A

NO. R- 6959
JOB NO. PW8260 13
SHEET 11 OF 44
DRAWING NO. B-4562

KLEINFELDER
Bright People. Right Solutions.
620 West 16th Street
Long Beach, CA 90813
www.kleinfelder.com PH. 562-432-1696 FAX. 562-432-1796

SN-2.1

LAST SAVED BY: jstewart
PLOT DATE: Oct. 18, 12 SAVED PATH: G:\124406_Long Beach Bluffs\100% Submittal

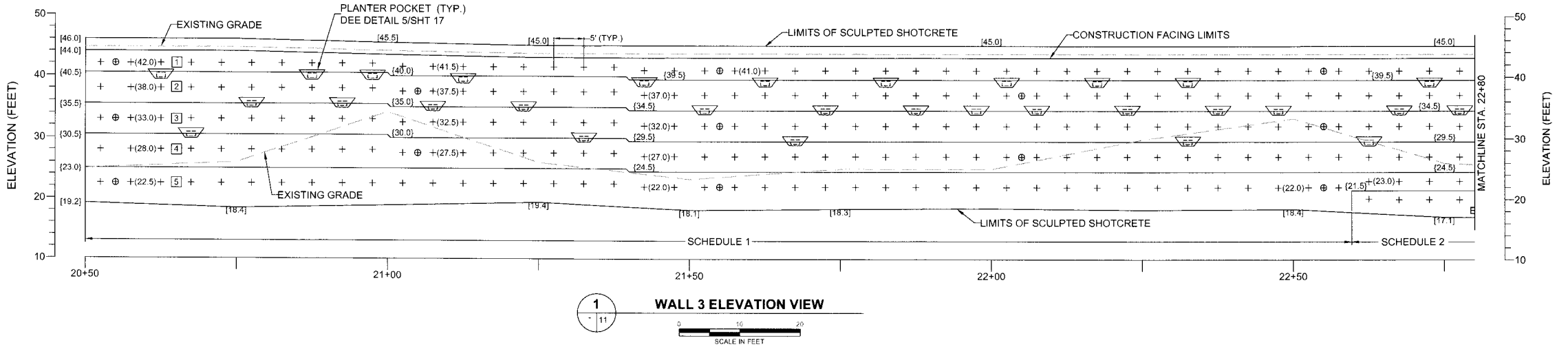

1 - 11 **WALL 3 ELEVATION VIEW**

SCALE IN FEET

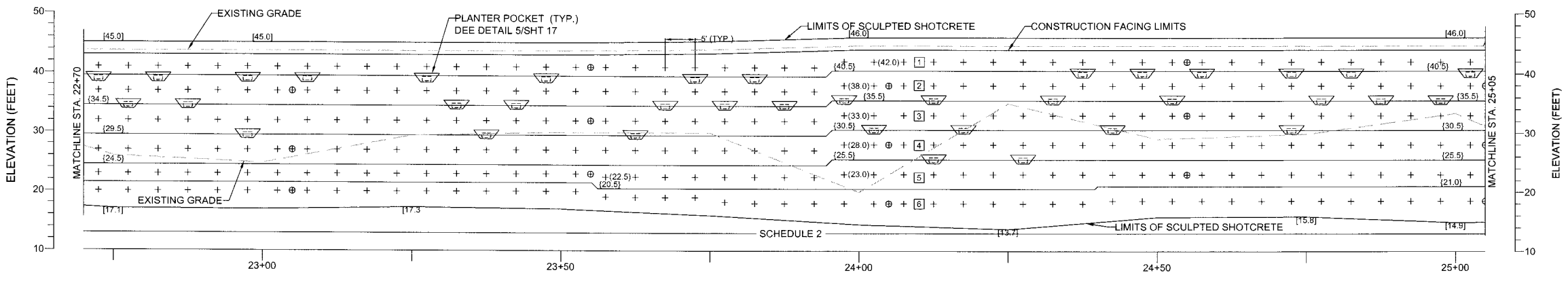

1 - 11 **WALL 3 ELEVATION VIEW**

SCALE IN FEET

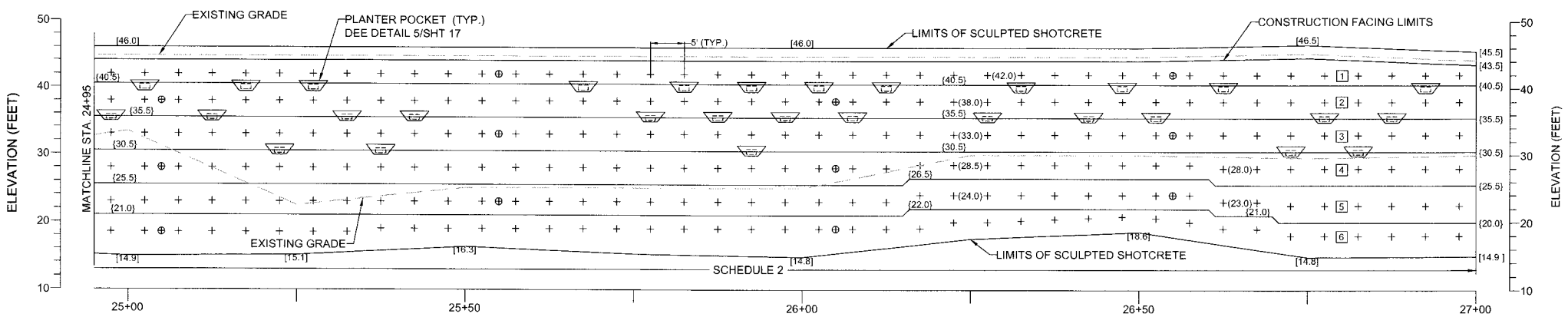

1 - 11 **WALL 3 ELEVATION VIEW**

SCALE IN FEET

LEGEND

- 1 - SOIL NAIL / TIEBACK ROW
- \+ -SOIL NAIL
- -PLANTER POCKET
- (379) - SOIL NAIL / TIEBACK ROW ELEVATION (PROPOSED)
- {376} - SHOTCRETE JOINT ELEVATION (PROPOSED)
- [381.0] - GRADE ELEVATION (PROPOSED)
- ROW - SOIL NAIL / TIEBACK ROW NUMBER
- L - DRILLED NAIL LENGTH (FEET)
- BAR - NAIL BAR SIZE
- GRADE - NAIL BAR STEEL GRADE (Fy)
- α - NAIL DECLINATION (DEGREES) UNLESS SHOWN OTHERWISE ON PLANS
- (15°) - DECLINATION ANGLE OF SPECIFIC NAIL
- A_D - ALLOWABLE DESIGN NAIL PULLOUT RESISTANCE (K/FT)
- ⊕ - TEST NAIL

SOIL NAIL SCHEDULE 1

ROW	L	BAR	GRADE	SPACING	α	A_D
1	30	#9	75	5	20	1.35
2	30	#9	75	5	20	1.35
3	30	#9	75	5	20	1.35
4	30	#9	75	5	20	1.35
5	30	#9	75	5	20	1.35

SOIL NAIL SCHEDULE 2

ROW	L	BAR	GRADE	SPACING	α	A_D
1	30	#9	75	5	20	1.35
2	30	#9	75	5	20	1.35
3	30	#9	75	5	20	1.35
4	30	#9	75	5	20	1.35
5	30	#9	75	5	20	1.35
6	30	#9	75	5	20	1.35

SOIL NAIL TESTING NOTES:

1. PROVIDE SACRIFICIAL TEST NAILS AT THE LOCATIONS SHOWN ON THE PLANS.
2. THE TEST NAILS SHALL BE 20 FEET IN TOTAL LENGTH WITH A 15 FOOT BONDED ZONE AND 5 FOOT UNBONDED ZONE.
3. THE TEST NAILS SHALL BE INSTALLED USING THE SAME MEANS AND METHODS AS THE PRODUCTION NAILS.
4. VERIFICATION AND PROOF TESTING SHALL BE CONDUCTED IN ACCORDANCE WITH SPECIFICATION 03361.
5. VERIFICATION 200% LOAD = 2 X 1.35 KIPS/FT X 15 FT = 40.5 KIPS
6. PROOF 150% LOAD = 1.5 X 1.35 KIPS/FT X 15 FT = 30.4 KIPS
7. FAILED TEST RESULTS SHALL BE REPORTED TO THE GEOTECHNICAL ENGINEER WITHIN 24 HOURS.

SOIL NAIL CONSTRUCTION SEQUENCE

1. BUILD CONSTRUCTION BERM FROM BEACH SIDE TO ALLOW DRILL RIG ACCESS TO TOP ROW OF SOIL NAILS. IMPORTED SOILS MAYBE REQUIRED DEPENDING ON CONSTRUCTION SEQUENCING, REACH OF DRILL RIG, AND WIDTH OF BENCH REQUIRED.
2. PROTECT EXISTING UTILITY LINES AT BASE OF SLOPE. SEE SHEETS 30-34 FOR EXISTING UTILITY LOCATIONS.
3. CONSTRUCTION BERMING SHALL BE LIMITED TO NO MORE THAN TWO SOIL NAIL AREAS CONCURRENTLY.
4. INSTALL FIRST ROW OF SOIL NAILS, GEOCOMPOSITE DRAINAGE STRIPS, AND CONSTRUCTION FACING.
5. AFTER CONSTRUCTION FACING SHOTCRETE HAS REACHED 50% OF THE 28 DAY DESIGN STRENGTH, INSTALL THE SECOND ROW OF SOIL NAILS, GEOCOMPOSITE DRAINAGE STRIPS, AND CONSTRUCTION FACING.
6. REPEAT CONSTRUCTION SEQUENCE TO THE BASE OF THE WALL, EXCAVATE SOIL AS REQUIRED TO INSTALL SOIL NAILS, INSTALLING WEEP HOLES AT BASE TIGHT LINED TO PVC HEADER PIPE.
7. REGRADE SLOPE AT BASE OF WALL TO 2.5H:1V AND INSTALL DRAINAGE OUT FALL PIPES.

REVISIONS

No.	DATE	SHEET	APPROVAL	DESCRIPTION

AS-BUILT:

REF. DWG. B-4506

DESIGNED BY: RDL/KLF
DRAWN BY: JJS/KLF
DESIGN CHECK BY: DMC/KLF
DRAFTING CHECK BY: RDL/KLF

ROBERT P. SIERADZKI — No. C 66925 — REGISTERED PROFESSIONAL ENGINEER — CIVIL — STATE OF CALIFORNIA

OCEAN BOULEVARD EROSION AND ENHANCEMENT PROJECT, PHASE 2
ELEVATION VIEW SOIL NAIL AREA 3

GRAPHIC SCALE 0 1 2 3

FIELD BOOK N/A | PAGE N/A

NO. R- 6959

JOB NO. PW8260 13

SHEET 12 OF 44

DRAWING NO. B-4562

KLEINFELDER
Bright People. Right Solutions.
620 West 16th Street
Long Beach, CA 90813
www.kleinfelder.com PH. 562-432-1696 FAX. 562-432-1796

SN-2.2

LAST SAVED BY: jstewart
PLOT DATE: Oct. 18, 12 SAVED PATH: G:\124406_Long Beach Bluffs\100% Submittal

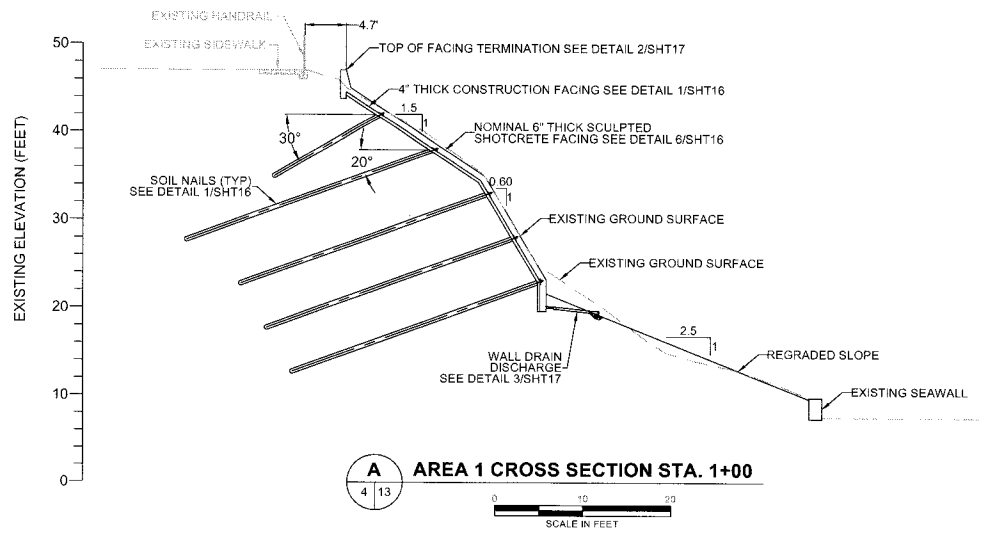

A **AREA 1 CROSS SECTION STA. 1+00**
4 | 13

0 10 20
SCALE IN FEET

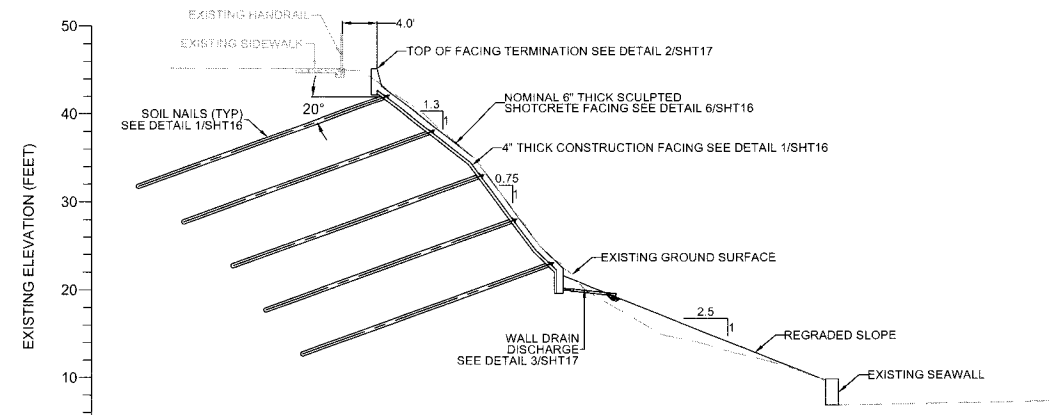

B **AREA 1 CROSS SECTION STA. 2+00**
4 | 13

0 10 20
SCALE IN FEET

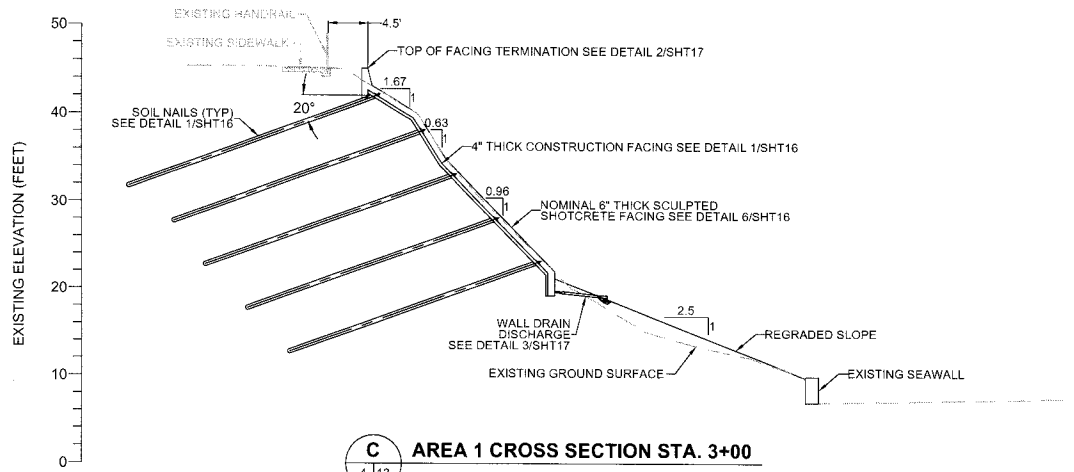

C **AREA 1 CROSS SECTION STA. 3+00**
4 | 13

0 10 20
SCALE IN FEET

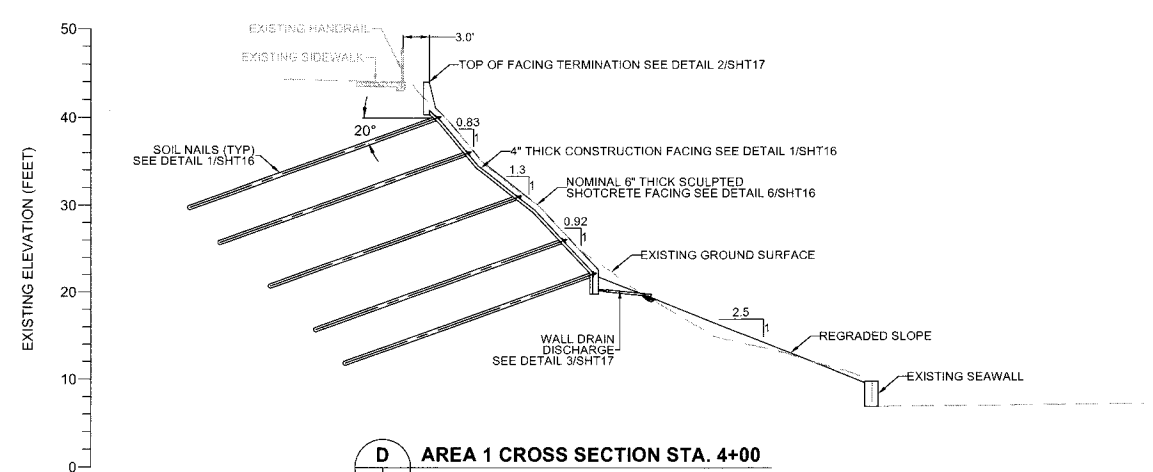

D **AREA 1 CROSS SECTION STA. 4+00**
4 | 13

0 10 20
SCALE IN FEET

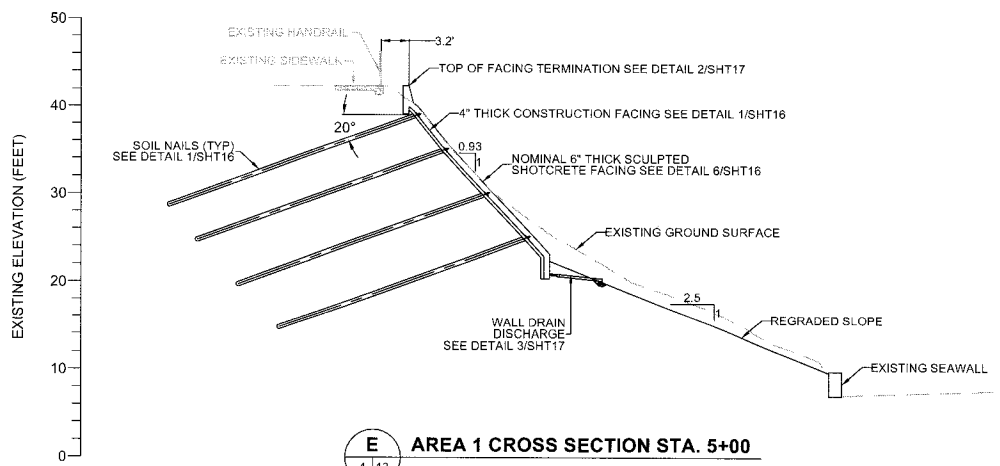

E **AREA 1 CROSS SECTION STA. 5+00**
4 | 13

0 10 20
SCALE IN FEET

SOIL NAIL AREA 1	
CUT	FILL
715 CY	427 CY

SPECIAL INSPECTION:

1. WHERE SPECIAL INSPECTION OR TESTING IS REQUIRES, THE REGISTERED DESIGN PROFESSIONAL IN RESPONSIBLE CHARGE SHALL INCLUDE A "STATEMENT OF SPECIAL INSPECTIONS" ON THE PLANS. (CBC 1705)
2. PERIODIC SPECIAL INSPECTION IS REQUIRED FOR CONCRETE, SHOTCRETE, STEEL, SOIL NAIL, AND GRADING PER CBC 1704.
3. SPECIAL INSPECTION OF CONCRETE ELEMENTS IN BUILDINGS AND STRUCTUES AND CONCRETING OPERATIONS SHALL BE AS REQUIRED BY CBC 1704.4 AND CBC T-1704.4. (CBC 1704.4 & 1901.5)
4. ADD THE FOLLOWING NOTES TO THE PLANS:
   a. CONTRACTORS RESPONSIBLE FOR THE CONSTRUCTION OF A WIND OR SEISMIC FORCE RESISTING SYSTEM/COMPONENT LISTED IN THE "STATEMENT OF SPECIAL INSPECTION" SHALL SUBMIT A WRITTEN STATMENT OF RESPONSIBILITY TO THE BUILDINGOFFICIAL AND THE OWNER PRIOR TO THE COMMENCEMENT OF WORK ON SUCH SYSTEM OR COMPONENT PER CBC 1709.1.
   b. CONTINIOUS SPECIAL INSPECTION BY A REGISTERED DEPUTY INSPECTOR IS REQUIRED FOR FIELD WELDING. CONCRETE STRENGTH F'C > 2500 PSI, HIGH-LIFT GROUTING, PRE-STRESSED CONCRETE. (CBC 1704 & CHAPTERS 19, 21, AND 22).
   c. FIELD WELDING TO BE DONE BY WELDERS CERTIFIED BY AN APPROVED AGENCY FOR (STRUCTURAL STEEL) (REINFORCING STEEL) (LIGHT GAUGE STEEL). CONTINUOUS INSPECTION BY A REGISTERED DEPUTY INSPECTOR IS REQUIRED.
   d. SHOP WELDS MUST BE PERFORMED IN A FABRICATOR'S SHOP LICENSED BY AN APPROVED AGENCY.

REGISTERED PROFESSIONAL ENGINEER MARIUSZ P. SIERADZKI No. GE 2864 GEOTECHNICAL STATE OF CALIFORNIA

SOIL NAIL TESTING NOTES:

1. PROVIDE SACRIFICIAL TEST NAILS AT THE LOCATIONS SHOWN ON THE PLANS.
2. THE TEST NAILS SHALL BE 20 FEET IN TOTAL LENGTH WITH A 15 FOOT BONDED ZONE AND 5 FOOT UNBONDED ZONE.
3. THE TEST NAILS SHALL BE INSTALLED USING THE SAME MEANS AND METHODS AS THE PRODUCTION NAILS.
4. VERIFICATION AND PROOF TESTING SHALL BE CONDUCTED IN ACCORDANCE WITH SPECIFICATION 03361.
5. VERIFICATION 200% LOAD = 2 X 1.35 KIPS/FT X 15 FT = 40.5 KIPS
6. PROOF 150% LOAD = 1.5 X 1.35 KIPS/FT X 15 FT = 30.4 KIPS
7. FAILED TEST RESULTS SHALL BE REPORTED TO THE GEOTECHNICAL ENGINEER WITHIN 24 HOURS.

SOIL NAIL CONSTRUCTION SEQUENCE

1. BUILD CONSTRUCTION BERM FROM BEACH SIDE TO ALLOW DRILL RIG ACCESS TO TOP ROW OF SOIL NAILS. IMPORTED SOILS MAYBE REQUIRED DEPENDING ON CONSTRUCTION SEQUENCING, REACH OF DRILL RIG, AND WIDTH OF BENCH REQUIRED.
2. PROTECT EXISTING UTILITY LINES AT BASE OF SLOPE. SEE SHEETS 30-34 FOR EXISTING UTILITY LOCATIONS.
3. CONSTRUCTION BERMING SHALL BE LIMITED TO NO MORE THAN TWO SOIL NAIL AREAS CONCURRENTLY.
4. INSTALL FIRST ROW OF SOIL NAILS, GEOCOMPOSITE DRAINAGE STRIPS, AND CONSTRUCTION FACING.
5. AFTER CONSTRUCTION FACING SHOTCRETE HAS REACHED 50% OF THE 28 DAY DESIGN STRENGTH, INSTALL THE SECOND ROW OF SOIL NAILS, GEOCOMPOSITE DRAINAGE STRIPS, AND CONSTRUCTION FACING.
6. REPEAT CONSTRUCTION SEQUENCE TO THE BASE OF THE WALL, EXCAVATE SOIL AS REQUIRED TO INSTALL SOIL NAILS, INSTALLING WEEP HOLES AT BASE TIGHT LINED TO PVC HEADER PIPE.
7. REGRADE SLOPE AT BASE OF WALL TO 2.5H:1V AND INSTALL DRAINAGE OUT FALL PIPES.

KLEINFELDER
Bright People. Right Solutions.
620 West 16th Street
Long Beach, CA 90813
www.kleinfelder.com PH. 562-432-1696 FAX. 562-432-1796

SN-3.0

REVISIONS				
No.	DATE	SHEET	APPROVAL	DESCRIPTION
AS-BUILT:				REF. DWG: B-4506

DESIGNED BY: RDL/KLF
DRAWN BY: JJS/KLF
DESIGN CHECK BY: DMC/KLF
DRAFTING CHECK BY: RDL/KLF

REGISTERED PROFESSIONAL ENGINEER MARIUSZ P. SIERADZKI No. C 66929 CIVIL STATE OF CALIFORNIA

OCEAN BOULEVARD EROSION AND ENHANCEMENT PROJECT, PHASE 2 CROSS SECTIONS SOIL NAIL AREA 1

GRAPHIC SCALE 0 1 2 3
FIELD BOOK N/A
PAGE N/A

NO. R- 6959
JOB NO. PW8260 13
SHEET 13 OF 44
DRAWING NO. B-4562

LAST SAVED By: jstewart
PLOT DATE: Oct. 18, '22 SAVED PATH: G:\124406_Long Beach Bluffs\100% Submittal

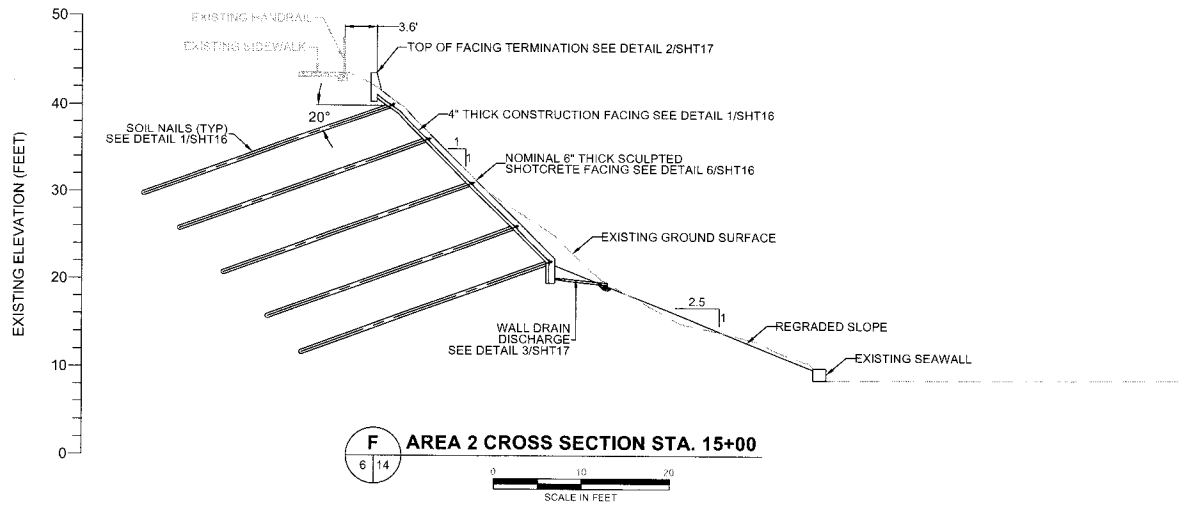

F 6|14 **AREA 2 CROSS SECTION STA. 15+00**

0 10 20
SCALE IN FEET

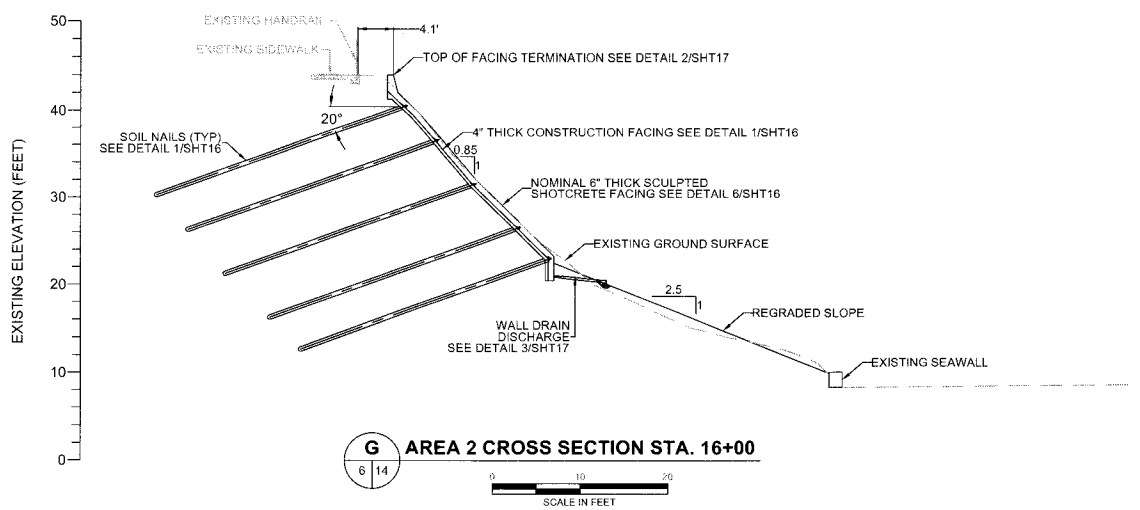

G 6|14 **AREA 2 CROSS SECTION STA. 16+00**

0 10 20
SCALE IN FEET

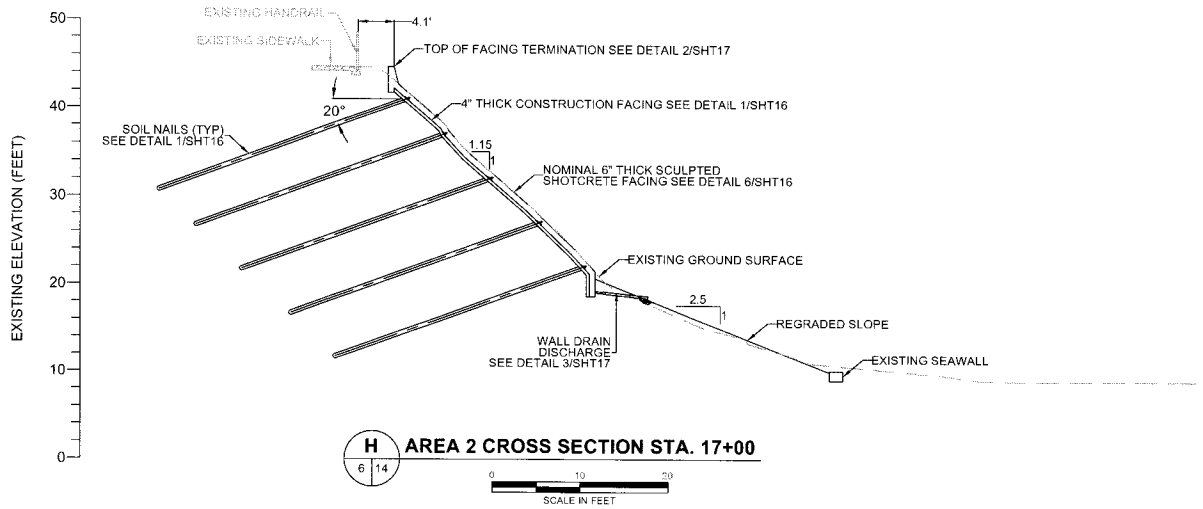

H 6|14 **AREA 2 CROSS SECTION STA. 17+00**

0 10 20
SCALE IN FEET

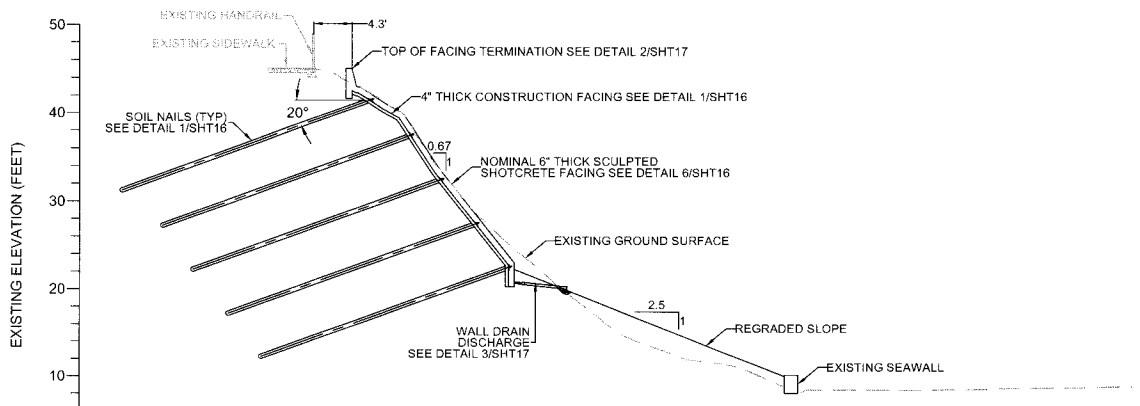

I 6,7|14 **AREA 2 CROSS SECTION STA. 18+00**

0 10 20
SCALE IN FEET

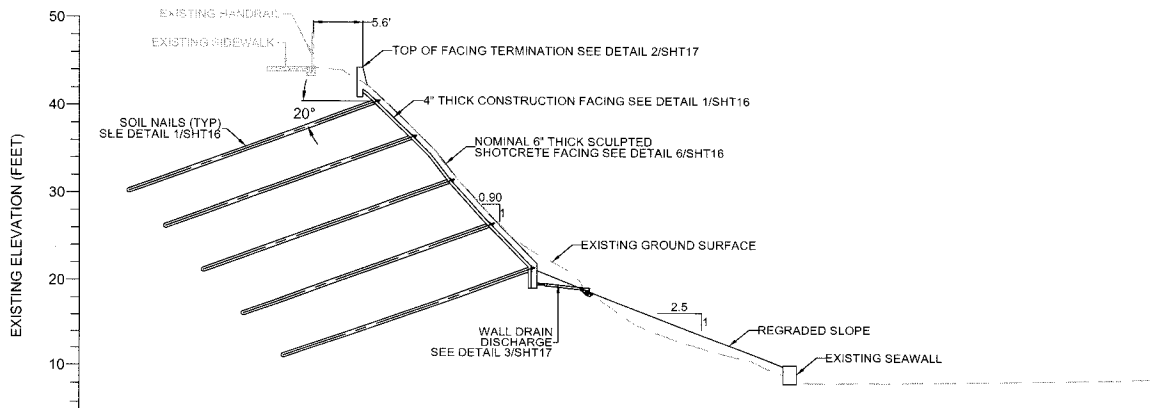

J 7|14 **AREA 2 CROSS SECTION STA. 19+00**

0 10 20
SCALE IN FEET

SOIL NAIL AREA 2	
CUT	FILL
839 CY	525 CY

SPECIAL INSPECTION:

1. WHERE SPECIAL INSPECTION OR TESTING IS REQUIRES, THE REGISTERED DESIGN PROFESSIONAL IN RESPONSIBLE CHARGE SHALL INCLUDE A "STATEMENT OF SPECIAL INSPECTIONS" ON THE PLANS. (CBC 1705)
2. PERIODIC SPECIAL INSPECTION IS REQUIRED FOR CONCRETE, SHOTCRETE, STEEL, SOIL NAIL, AND GRADING PER CBC 1704.
3. SPECIAL INSPECTION OF CONCRETE ELEMENTS IN BUILDINGS AND STRUCTUES AND CONCRETING OPERATIONS SHALL BE AS REQUIRED BY CBC 1704.4 AND CBC T-1704.4. (CBC 1704.4 & 1901.5)
4. ADD THE FOLLOWING NOTES TO THE PLANS:
   a. CONTRACTORS RESPONSIBLE FOR THE CONSTRUCTION OF A WIND OR SEISMIC FORCE RESISTING SYSTEM/COMPONENT LISTED IN THE "STATEMENT OF SPECIAL INSPECTION" SHALL SUBMIT A WRITTEN STATMENT OF RESPONSIBILITY TO THE BUILDINGOFFICIAL AND THE OWNER PRIOR TO THE COMMENCEMENT OF WORK ON SUCH SYSTEM OR COMPONENT PER CBC 1709.1.
   b. CONTINIOUS SPECIAL INSPECTION BY A REGISTERED DEPUTY INSPECTOR IS REQUIRED FOR FIELD WELDING, CONCRETE STRENGTH F'C > 2500 PSI, HIGH-LIFT GROUTING, PRE-STRESSED CONCRETE. (CBC 1704 & CHAPTERS 19, 21, AND 22).
   c. FIELD WELDING TO BE DONE BY WELDERS CERTIFIED BY AN APPROVED AGENCY FOR (STRUCTURAL STEEL) (REINFORCING STEEL) (LIGHT GAUGE STEEL). CONTINUOUS INSPECTION BY A REGISTERED DEPUTY INSPECTOR IS REQUIRED.
   d. SHOP WELDS MUST BE PERFORMED IN A FABRICATOR'S SHOP LICENSED BY AN APPROVED AGENCY.

REGISTERED PROFESSIONAL ENGINEER
MARIOLEZ R. SIERADZKI
No. GE 2864
GEOTECHNICAL
STATE OF CALIFORNIA

SOIL NAIL TESTING NOTES:

1. PROVIDE SACRIFICIAL TEST NAILS AT THE LOCATIONS SHOWN ON THE PLANS.
2. THE TEST NAILS SHALL BE 20 FEET IN TOTAL LENGTH WITH A 15 FOOT BONDED ZONE AND 5 FOOT UNBONDED ZONE.
3. THE TEST NAILS SHALL BE INSTALLED USING THE SAME MEANS AND METHODS AS THE PRODUCTION NAILS.
4. VERIFICATION AND PROOF TESTING SHALL BE CONDUCTED IN ACCORDANCE WITH SPECIFICATION 03361.
5. VERIFICATION 200% LOAD = 2 X 1.35 KIPS/FT X 15 FT = 40.5 KIPS
6. PROOF 150% LOAD = 1.5 X 1.35 KIPS/FT X 15 FT = 30.4 KIPS
7. FAILED TEST RESULTS SHALL BE REPORTED TO THE GEOTECHNICAL ENGINEER WITHIN 24 HOURS.

SOIL NAIL CONSTRUCTION SEQUENCE

1. BUILD CONSTRUCTION BERM FROM BEACH SIDE TO ALLOW DRILL RIG ACCESS TO TOP ROW OF SOIL NAILS. IMPORTED SOILS MAYBE REQUIRED DEPENDING ON CONSTRUCTION SEQUENCING, REACH OF DRILL RIG, AND WIDTH OF BENCH REQUIRED.
2. PROTECT EXISTING UTILITY LINES AT BASE OF SLOPE. SEE SHEETS 30-34 FOR EXISTING UTILITY LOCATIONS.
3. CONSTRUCTION BERMING SHALL BE LIMITED TO NO MORE THAN TWO SOIL NAIL AREAS CONCURRENTLY.
4. INSTALL FIRST ROW OF SOIL NAILS, GEOCOMPOSITE DRAINAGE STRIPS, AND CONSTRUCTION FACING.
5. AFTER CONSTRUCTION FACING SHOTCRETE HAS REACHED 50% OF THE 28 DAY DESIGN STRENGTH, INSTALL THE SECOND ROW OF SOIL NAILS, GEOCOMPOSITE DRAINAGE STRIPS, AND CONSTRUCTION FACING.
6. REPEAT CONSTRUCTION SEQUENCE TO THE BASE OF THE WALL, EXCAVATE SOIL AS REQUIRED TO INSTALL SOIL NAILS, INSTALLING WEEP HOLES AT BASE TIGHT LINED TO PVC HEADER PIPE.
7. REGRADE SLOPE AT BASE OF WALL TO 2.5H:1V AND INSTALL DRAINAGE OUT FALL PIPES.

KLEINFELDER
Bright People. Right Solutions.
620 West 16th Street
Long Beach, CA 90813
www.kleinfelder.com PH. 562-432-1696 FAX. 562-432-1796

SN-3.1

REVISIONS

No.	DATE	SHEET	APPROVAL	DESCRIPTION

AS-BUILT:

REF. DWG. B-4506

DESIGNED BY: RDL/KLF
DRAWN BY: JJS/KLF
DESIGN CHECK BY: DMC/KLF
DRAFTING CHECK BY: RDL/KLF

REGISTERED PROFESSIONAL ENGINEER
MARIOLEZ R. SIERADZKI
No. C 56935
CIVIL
STATE OF CALIFORNIA

OCEAN BOULEVARD EROSION AND ENHANCEMENT PROJECT, PHASE 2 CROSS SECTIONS SOIL NAIL AREA 2

FIELD BOOK: N/A
PAGE: N/A
GRAPHIC SCALE: 0 1 2

NO. R- 6959
JOB NO. PW8260 13
SHEET 14 OF 44
DRAWING NO. B-4562

LAST SAVED BY: jstewart
PLOT DATE: Oct. 16, 12 SAVED PATH: G:\124405_Long Beach Bluffs\100% Submittal

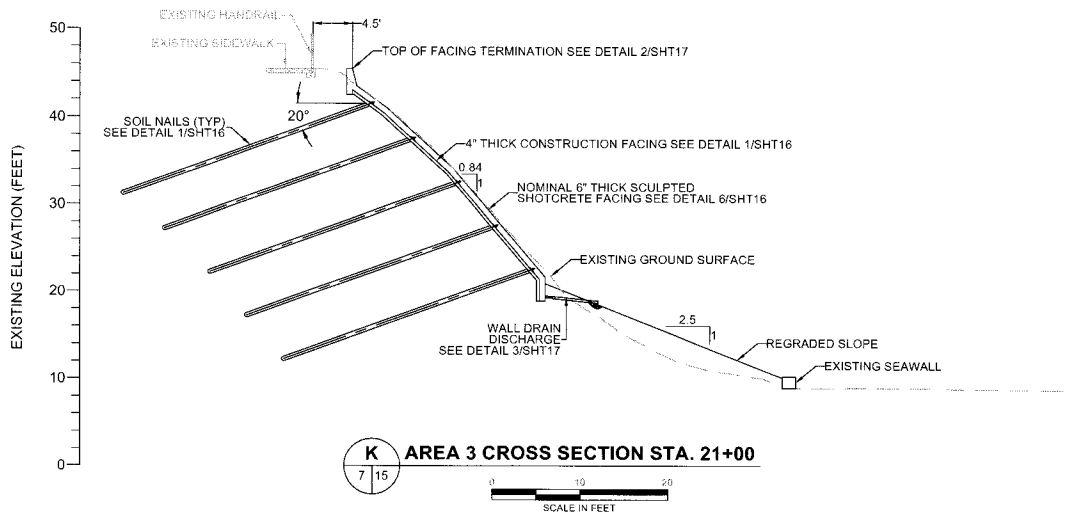

K 7 15 **AREA 3 CROSS SECTION STA. 21+00**

SCALE IN FEET 0 10 20

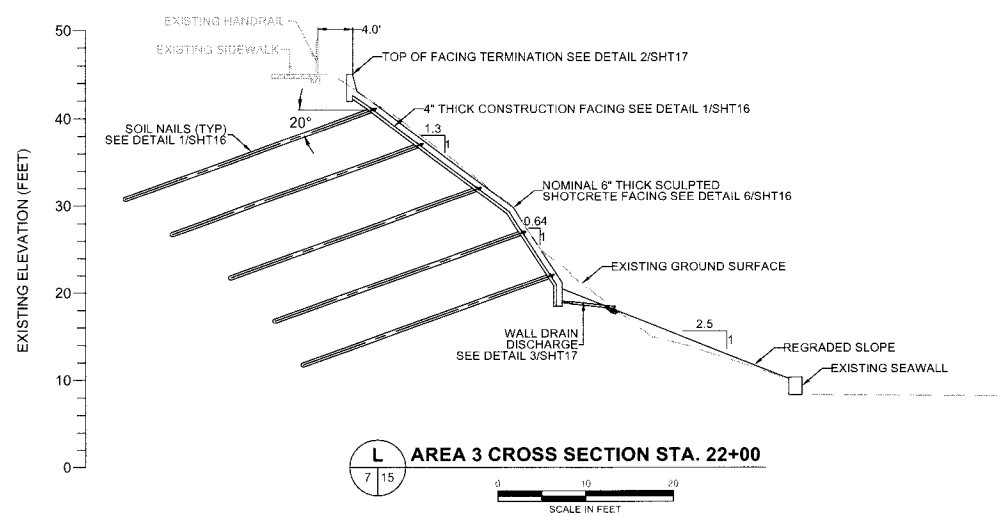

L 7 15 **AREA 3 CROSS SECTION STA. 22+00**

SCALE IN FEET 0 10 20

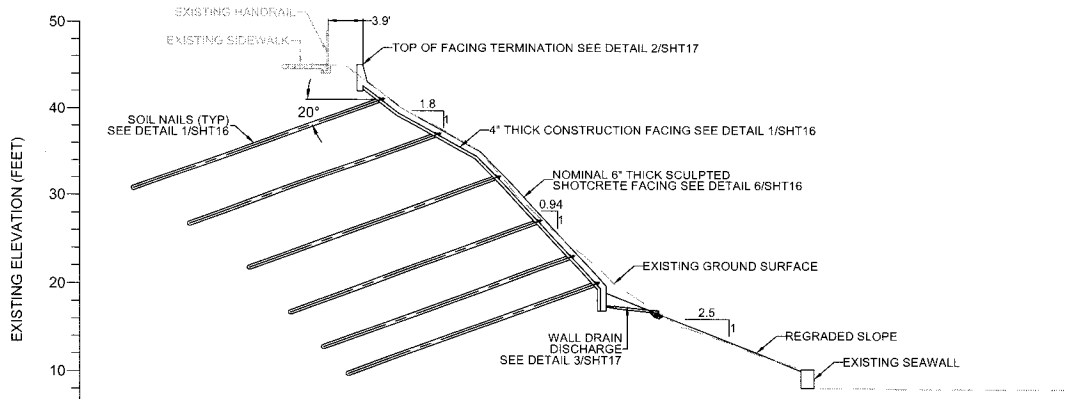

M 7 15 **AREA 3 CROSS SECTION STA. 23+00**

SCALE IN FEET 0 10 20

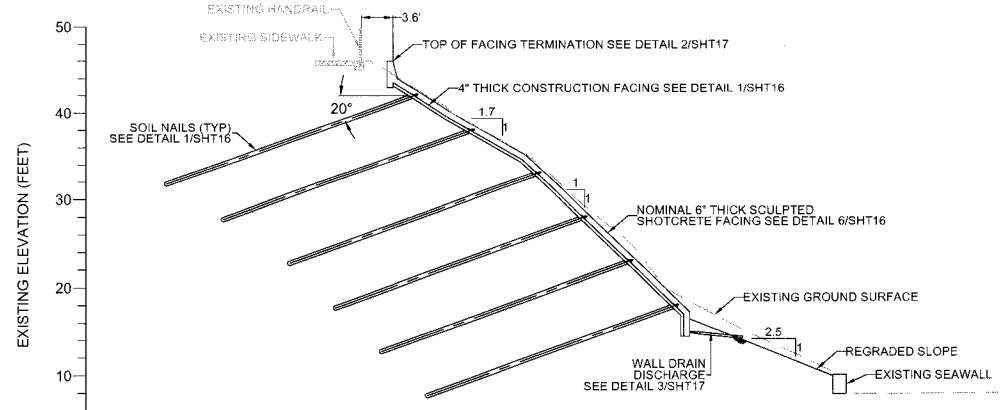

N 7.8 15 **AREA 3 CROSS SECTION STA. 24+00**

SCALE IN FEET 0 10 20

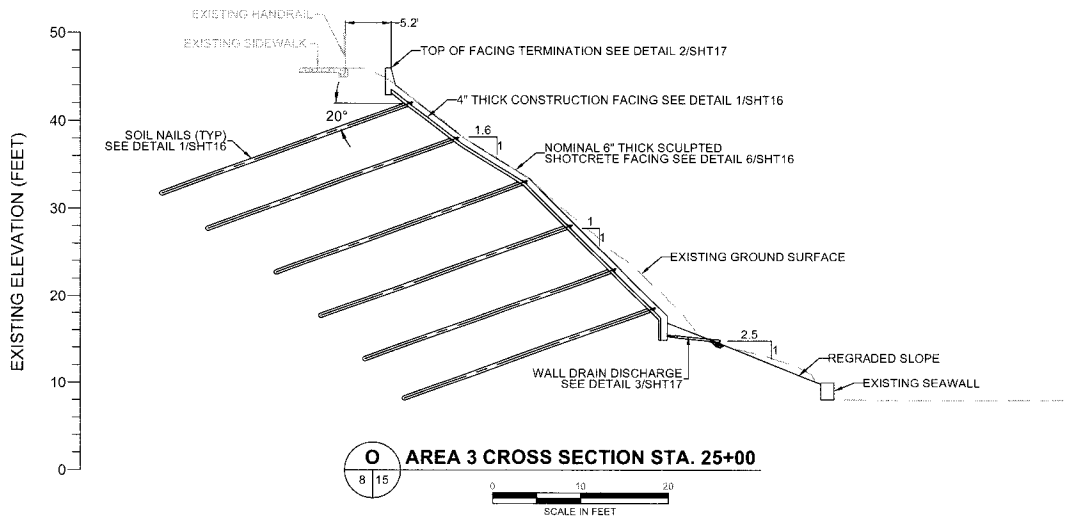

O 8 15 **AREA 3 CROSS SECTION STA. 25+00**

SCALE IN FEET 0 10 20

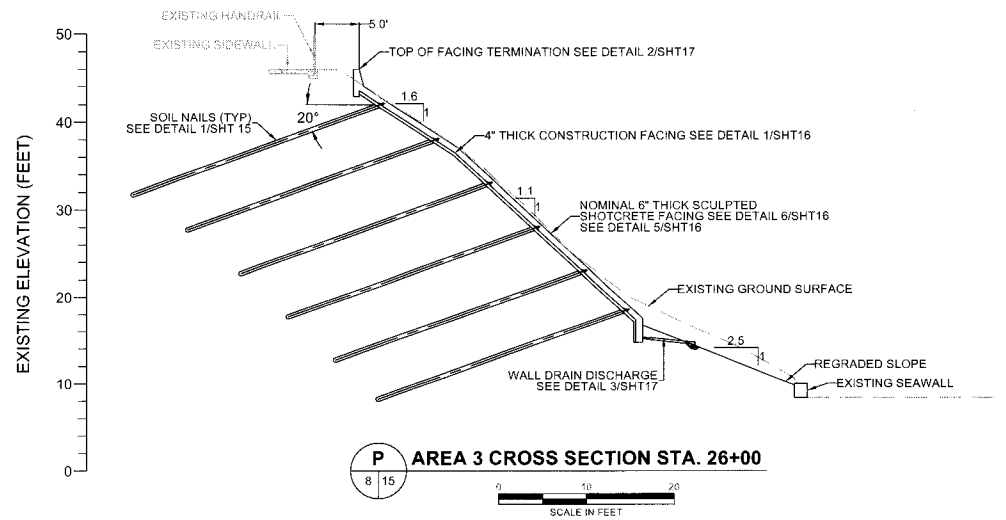

P 8 15 **AREA 3 CROSS SECTION STA. 26+00**

SCALE IN FEET 0 10 20

SPECIAL INSPECTION:

1. WHERE SPECIAL INSPECTION OR TESTING IS REQUIRES, THE REGISTERED DESIGN PROFESSIONAL IN RESPONSIBLE CHARGE SHALL INCLUDE A "STATEMENT OF SPECIAL INSPECTIONS" ON THE PLANS. (CBC 1705)
2. PERIODIC SPECIAL INSPECTION IS REQUIRED FOR CONCRETE, SHOTCRETE, STEEL, SOIL NAIL, AND GRADING PER CBC 1704.
3. SPECIAL INSPECTION OF CONCRETE ELEMENTS IN BUILDINGS AND STRUCTUES AND CONCRETING OPERATIONS SHALL BE AS REQUIRED BY CBC 1704.4 AND CBC T-1704.4. (CBC 1704.4 & 1901.5)
4. ADD THE FOLLOWING NOTES TO THE PLANS:
   a. CONTRACTORS RESPONSIBLE FOR THE CONSTRUCTION OF A WIND OR SEISMIC FORCE RESISTING SYSTEM/COMPONENT LISTED IN THE "STATEMENT OF SPECIAL INSPECTION" SHALL SUBMIT A WRITTEN STATMENT OF RESPONSIBILITY TO THE BUILDINGOFFICIAL AND THE OWNER PRIOR TO THE COMMENCEMENT OF WORK ON SUCH SYSTEM OR COMPONENT PER CBC 1709.1.
   b. CONTINIOUS SPECIAL INSPECTION BY A REGISTERED DEPUTY INSPECTOR IS REQUIRED FOR FIELD WELDING, CONCRETE STRENGTH F'C > 2500 PSI, HIGH-LIFT GROUTING, PRE-STRESSED CONCRETE. (CBC 1704 & CHAPTERS 19, 21, AND 22).
   c. FIELD WELDING TO BE DONE BY WELDERS CERTIFIED BY AN APPROVED AGENCY FOR (STRUCTURAL STEEL) (REINFORCING STEEL) (LIGHT GAUGE STEEL). CONTINUOUS INSPECTION BY A REGISTERED DEPUTY INSPECTOR IS REQUIRED.
   d. SHOP WELDS MUST BE PERFORMED IN A FABRICATOR'S SHOP LICENSED BY AN APPROVED AGENCY.

REGISTERED PROFESSIONAL ENGINEER MARIUS P. SIERADZKI No. GE 2864 GEOTECHNICAL STATE OF CALIFORNIA

SOIL NAIL AREA 3	
CUT	FILL
1,518 CY	62 CY

SOIL NAIL TESTING NOTES:

1. PROVIDE SACRIFICIAL TEST NAILS AT THE LOCATIONS SHOWN ON THE PLANS.
2. THE TEST NAILS SHALL BE 20 FEET IN TOTAL LENGTH WITH A 15 FOOT BONDED ZONE AND 5 FOOT UNBONDED ZONE.
3. THE TEST NAILS SHALL BE INSTALLED USING THE SAME MEANS AND METHODS AS THE PRODUCTION NAILS.
4. VERIFICATION AND PROOF TESTING SHALL BE CONDUCTED IN ACCORDANCE WITH SPECIFICATION 03361.
5. VERIFICATION 200% LOAD = 2 X 1.35 KIPS/FT X 15 FT = 40.5 KIPS
6. PROOF 150% LOAD = 1.5 X 1.35 KIPS/FT X 15 FT = 30.4 KIPS
7. FAILED TEST RESULTS SHALL BE REPORTED TO THE GEOTECHNICAL ENGINEER WITHIN 24 HOURS.

SOIL NAIL CONSTRUCTION SEQUENCE

1. BUILD CONSTRUCTION BERM FROM BEACH SIDE TO ALLOW DRILL RIG ACCESS TO TOP ROW OF SOIL NAILS. IMPORTED SOILS MAYBE REQUIRED DEPENDING ON CONSTRUCTION SEQUENCING, REACH OF DRILL RIG, AND WIDTH OF BENCH REQUIRED.
2. PROTECT EXISTING UTILITY LINES AT BASE OF SLOPE. SEE SHEETS 30-34 FOR EXISTING UTILITY LOCATIONS.
3. CONSTRUCTION BERMING SHALL BE LIMITED TO NO MORE THAN TWO SOIL NAIL AREAS CONCURRENTLY.
4. INSTALL FIRST ROW OF SOIL NAILS, GEOCOMPOSITE DRAINAGE STRIPS, AND CONSTRUCTION FACING.
5. AFTER CONSTRUCTION FACING SHOTCRETE HAS REACHED 50% OF THE 28 DAY DESIGN STRENGTH, INSTALL THE SECOND ROW OF SOIL NAILS, GEOCOMPOSITE DRAINAGE STRIPS, AND CONSTRUCTION FACING.
6. REPEAT CONSTRUCTION SEQUENCE TO THE BASE OF THE WALL, EXCAVATE SOIL AS REQUIRED TO INSTALL SOIL NAILS, INSTALLING WEEP HOLES AT BASE TIGHT LINED TO PVC HEADER PIPE.
7. REGRADE SLOPE AT BASE OF WALL TO 2.5H:1V AND INSTALL DRAINAGE OUT FALL PIPES.

KLEINFELDER
Bright People. Right Solutions.
620 West 16th Street
Long Beach, CA 90813
www.kleinfelder.com PH. 562-432-1696 FAX 562-432-1796

SN-3.2

REVISIONS

No.	DATE	SHEET	APPROVAL	DESCRIPTION

DESIGNED BY: RDL/KLF
DRAWN BY: JJS/KLF
DESIGN CHECK BY: DMC/KLF
DRAFTING CHECK BY: RDL/KLF
AS-BUILT:
REF. DWG. B-4506

REGISTERED PROFESSIONAL ENGINEER MARIUS P. SIERADZKI No. C 66925 CIVIL STATE OF CALIFORNIA

OCEAN BOULEVARD EROSION AND ENHANCEMENT PROJECT, PHASE 2 CROSS SECTIONS SOIL NAIL AREA 3

GRAPHIC SCALE 0 1 2 3
PAGE N/A
FIELD BOOK N/A

NO. R- 6959
JOB NO. PW8260 13
SHEET 15 OF 44
DRAWING NO. B-4562

LAST SAVED BY: jstewart
PLOT DATE: Oct. 18, 12 SAVED PATH: G:\124406_Long Beach Bluffs\100% Submittal

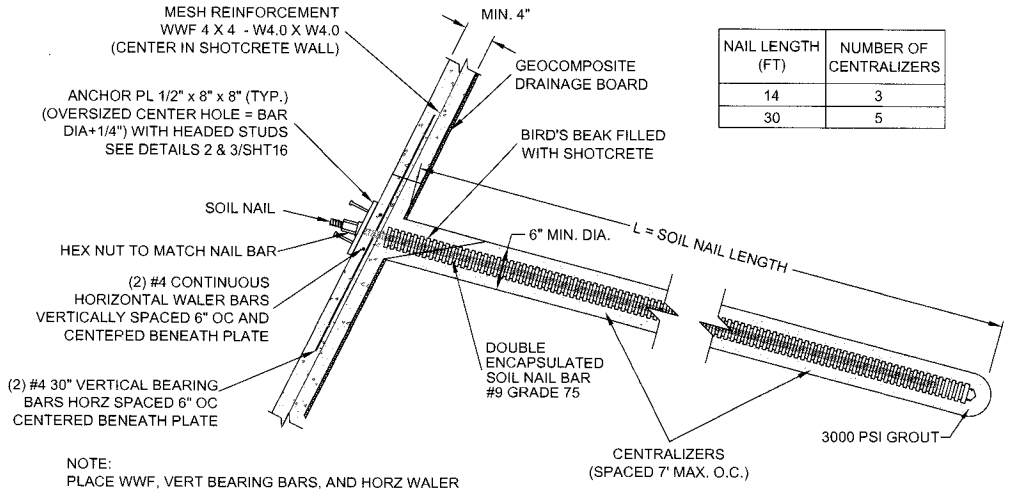

NAIL LENGTH (FT)	NUMBER OF CENTRALIZERS
14	3
30	5

NOTE:
PLACE WWF, VERT BEARING BARS, AND HORZ WALER BARS IN CENTER OF WALL.

1 - 16 CONSTRUCTION SHOTCRETE FACING AND PERMANENT NAIL DETAIL - PROFILE VIEW
NOT TO SCALE

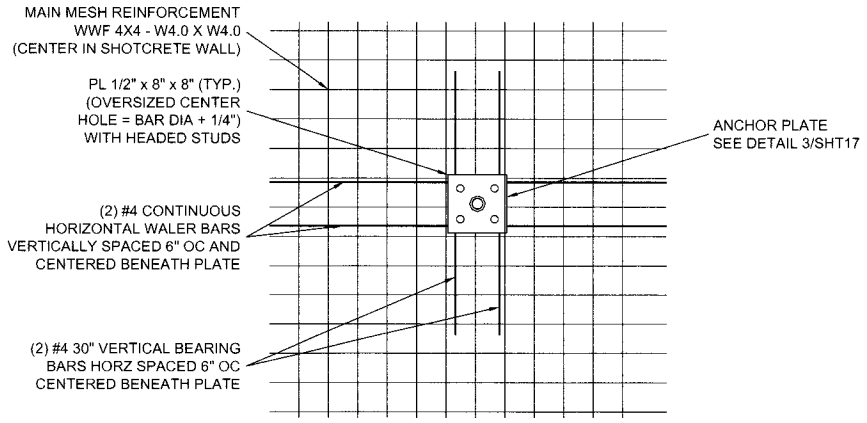

2 - 16 CONSTRUCTION SHOTCRETE FACING AND REINFORCEMENT DETAIL (ELEVATION VIEW)
NOT TO SCALE

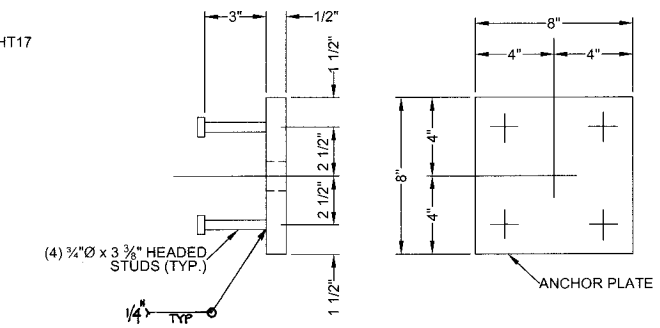

3 - 16 ANCHOR PLATE DETAIL
NOT TO SCALE

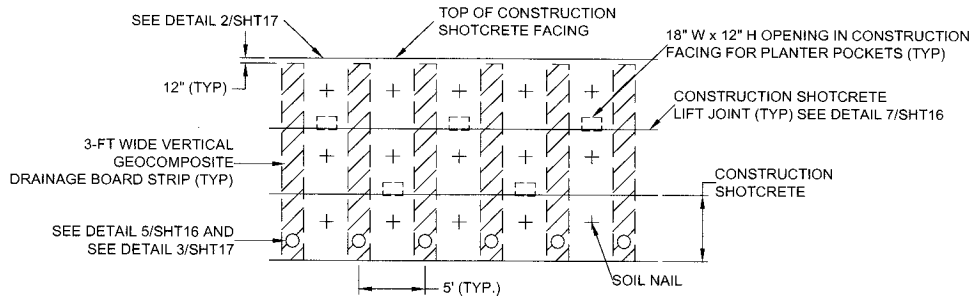

NOTE: 2" DIA. NOMINAL PVC CONNECTOR PIPES 6" FROM BASE OF SHOTCRETE, SEE DETAIL 5/SHT16

4 - 16 PERMANENT DRAINAGE DETAIL, SOIL NAIL AREA
NOT TO SCALE

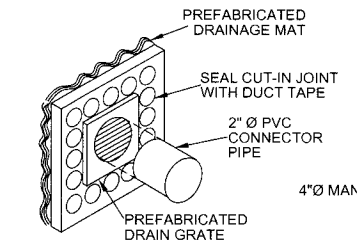

ISOMETRIC VIEW

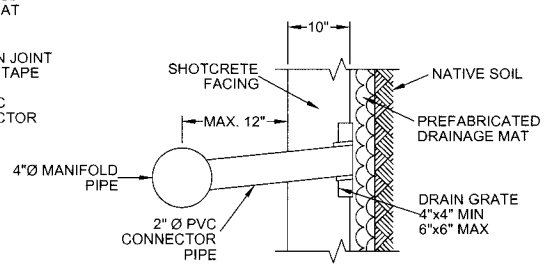

SECTIONAL VIEW

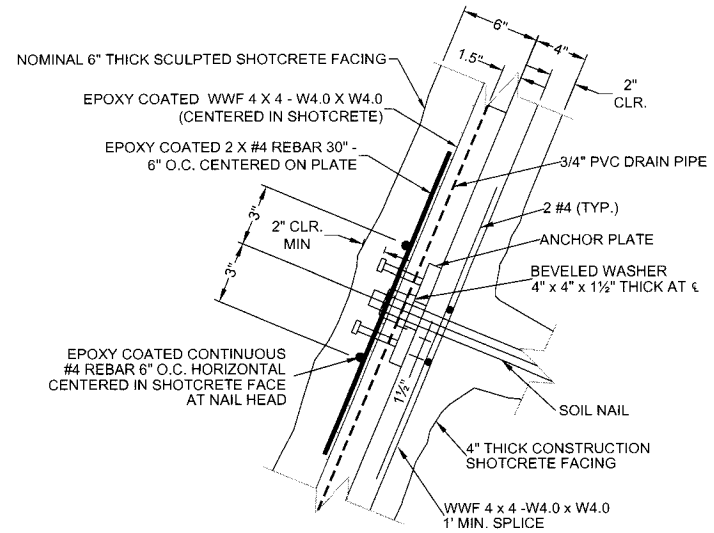

6 - 16 PERMANENT FACING DETAIL
NOT TO SCALE

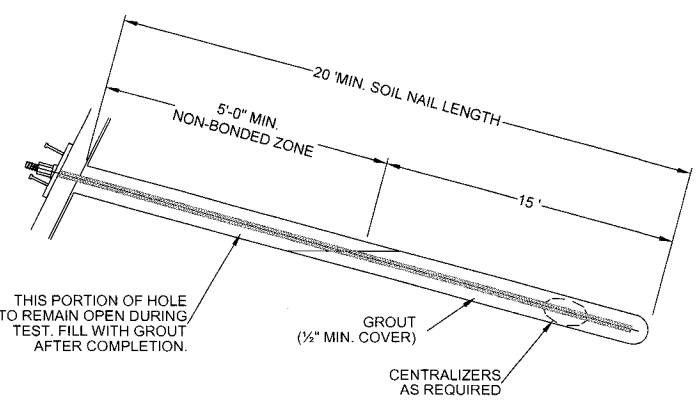

TL = TEST LOAD = (BOND LENGTH) X (DESIGN LOAD TRANSFER)

3 - 16 TEST NAIL DETAIL
NOT TO SCALE

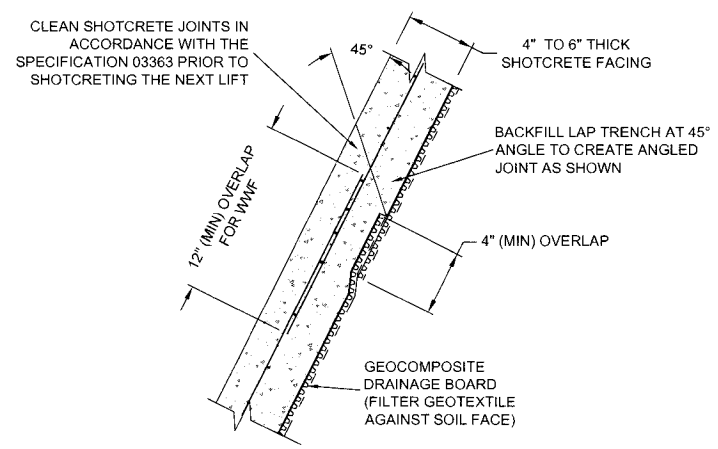

7 - 16 SHOTCRETE JOINT DETAIL
NOT TO SCALE

No.	DATE	REVISIONS	SHEET	APPROVAL	DESCRIPTION
		AS-BUILT:			REF. DWG. B-4506

DESIGNED BY: RDL/KLF
DRAWN BY: JJS/KLF
DESIGN CHECK BY: DMC/KLF
DRAFTING CHECK BY: RDL/KLF

REGISTERED PROFESSIONAL ENGINEER MARIUSZ P. SIERADZKI No. C 56925 CIVIL STATE OF CALIFORNIA

OCEAN BOULEVARD EROSION AND ENHANCEMENT PROJECT, PHASE 2 DETAILS (1 OF 2)

GRAPHIC SCALE 0 1 2 5
FIELD BOOK N/A
PAGE N/A

NO. R- 6959
JOB NO. PW8260 13
SHEET 16 OF 44
DRAWING NO. B-4562

KLEINFELDER
Bright People. Right Solutions.
620 West 16th Street
Long Beach, CA 90813
PH. 562-432-1696 FAX. 562-432-1796
www.kleinfelder.com

SN-4.0

LAST SAVED BY: jstewart
PLOT DATE: Oct. 18, 12 SAVED PATH: G:\124406_Long Beach Bluffs\100% Submittal

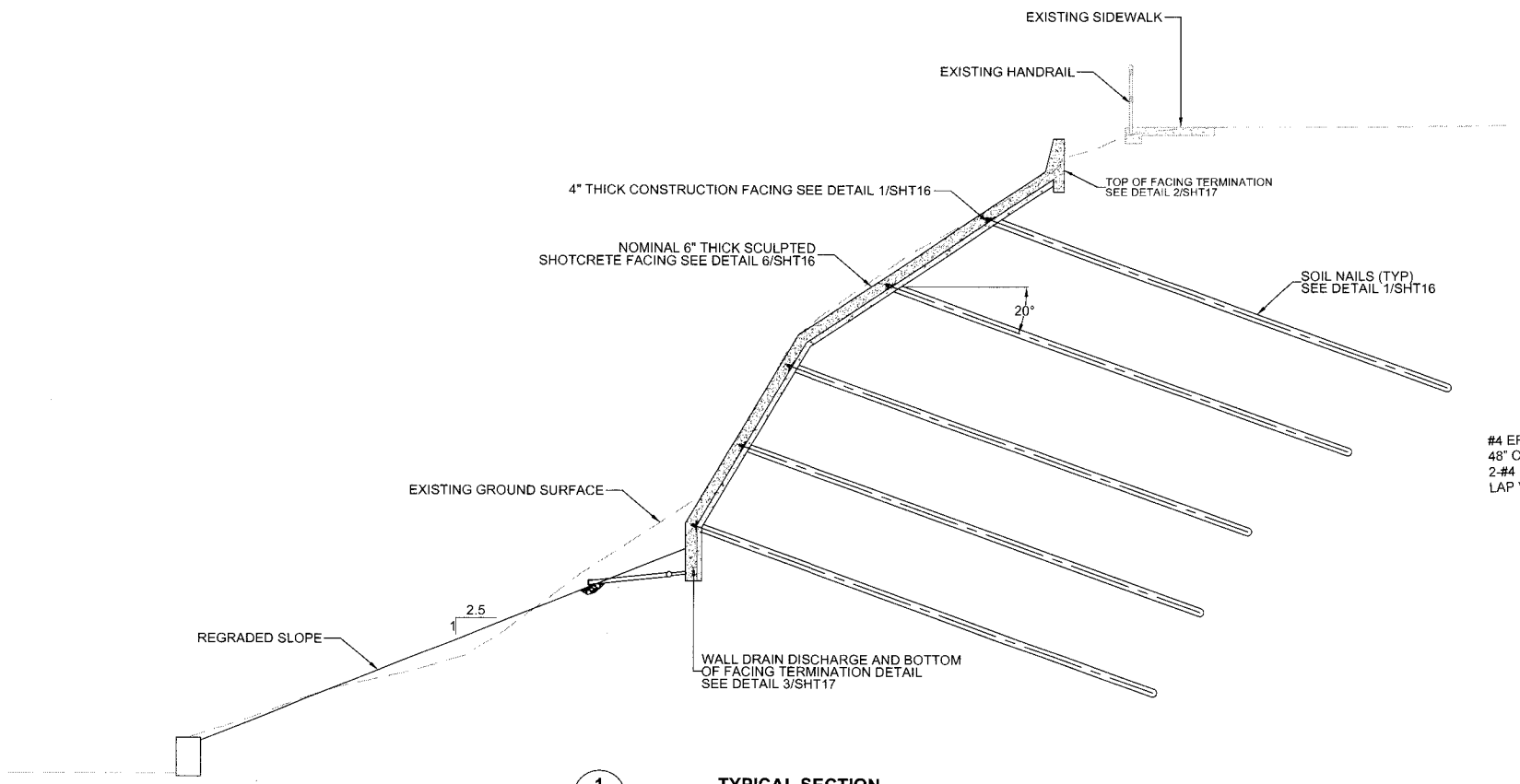

1 / 17 **TYPICAL SECTION**
NOT TO SCALE

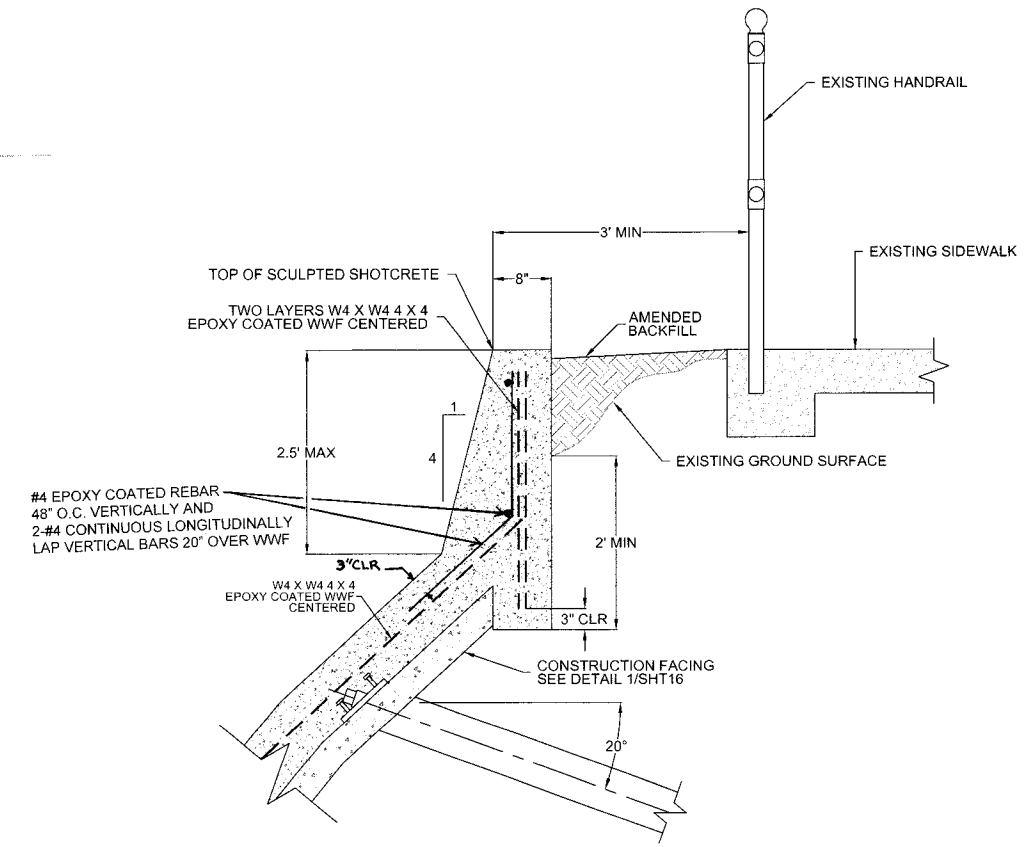

2 / 17 **TOP OF WALL DETAIL**
NOT TO SCALE

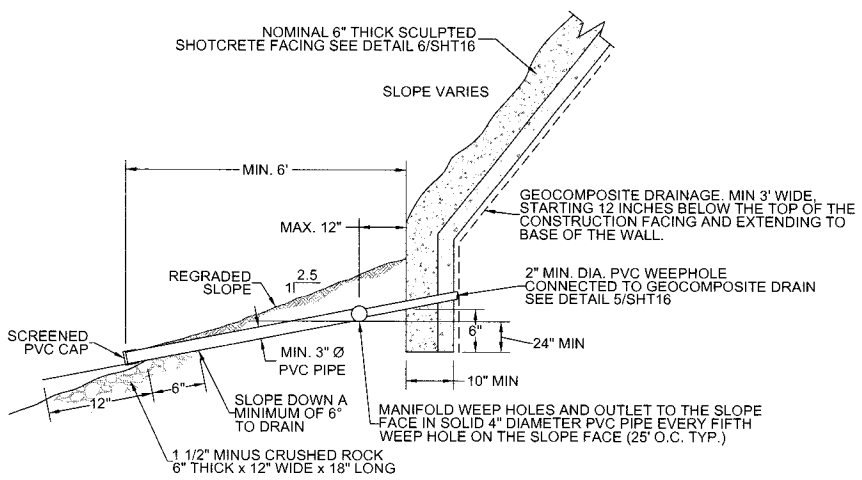

3 / 17 WALL DRAIN DISCHARGE AND BOTTOM OF FACING TERMINATION DETAIL
NOT TO SCALE

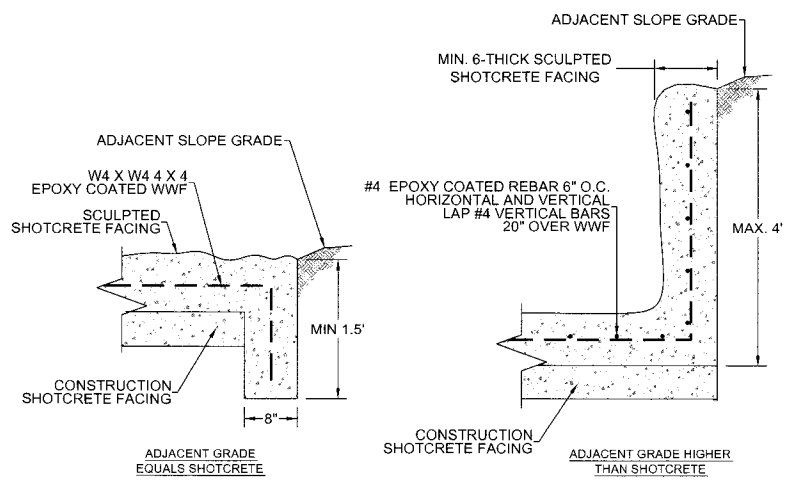

4 / 17 **END OF WALL TERMINATION DETAILS**
NOT TO SCALE

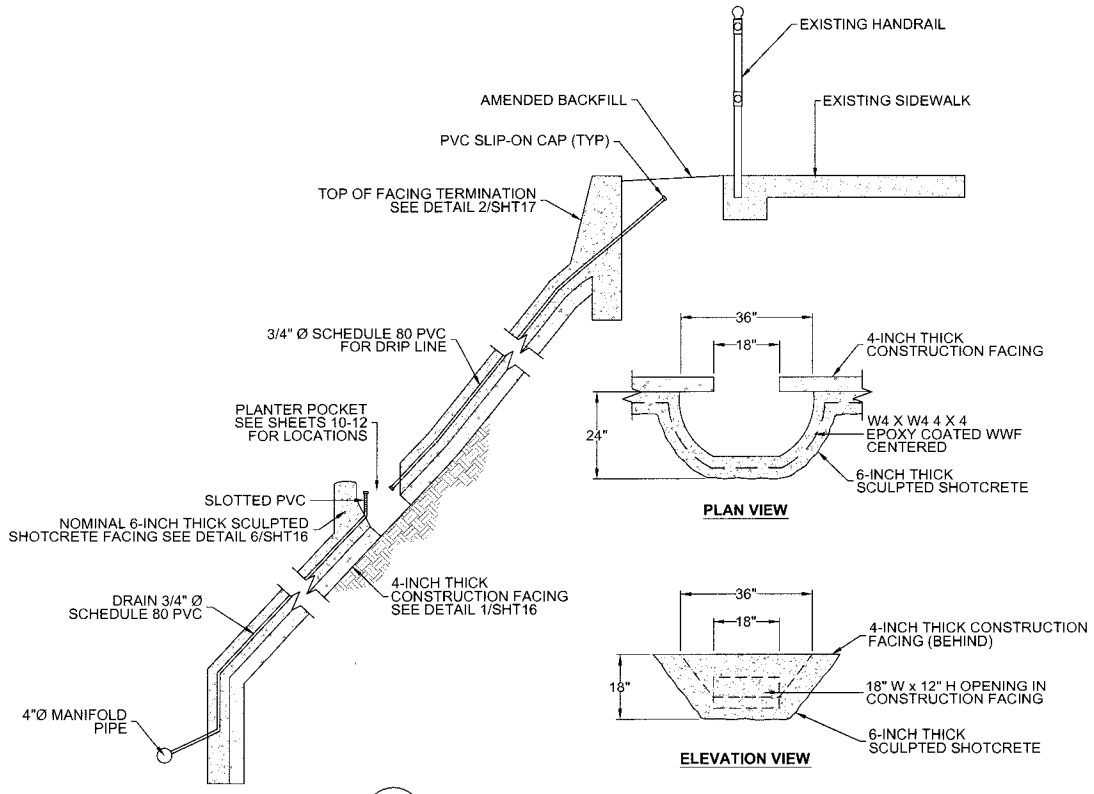

5 / 17 **PLANTER POCKET DETAIL**
NOT TO SCALE

REVISIONS				DESCRIPTION
No.	DATE	SHEET	APPROVAL	
AS-BUILT:				REF. DWG. B-4506

DESIGNED BY: RDL/KLF
DRAWN BY: JJS/KLF
DESIGN CHECK BY: DMC/KLF
DRAFTING CHECK BY: RDL/KLF

REGISTERED PROFESSIONAL ENGINEER MARIUSZ P. SIERADZKI No. C 66929 CIVIL STATE OF CALIFORNIA

OCEAN BOULEVARD EROSION AND ENHANCEMENT PROJECT, PHASE 2 DETAILS (2 OF 2)

GRAPHIC SCALE 0 1 2 3
PAGE N/A
FIELD BOOK N/A

NO. R- 6959
JOB NO. PW8260 13
SHEET 17 OF 44
DRAWING NO. B-4562

KLEINFELDER
Bright People. Right Solutions.
620 West 16th Street
Long Beach, CA 90813
www.kleinfelder.com PH. 562-432-1696 FAX 562-432-1796

SN-4.1

LAST SAVED BY: jstewart
PLOT DATE: Oct. 18, 12 SAVED PATH: G:\124408_Long Beach Bluffs\100% Submittal

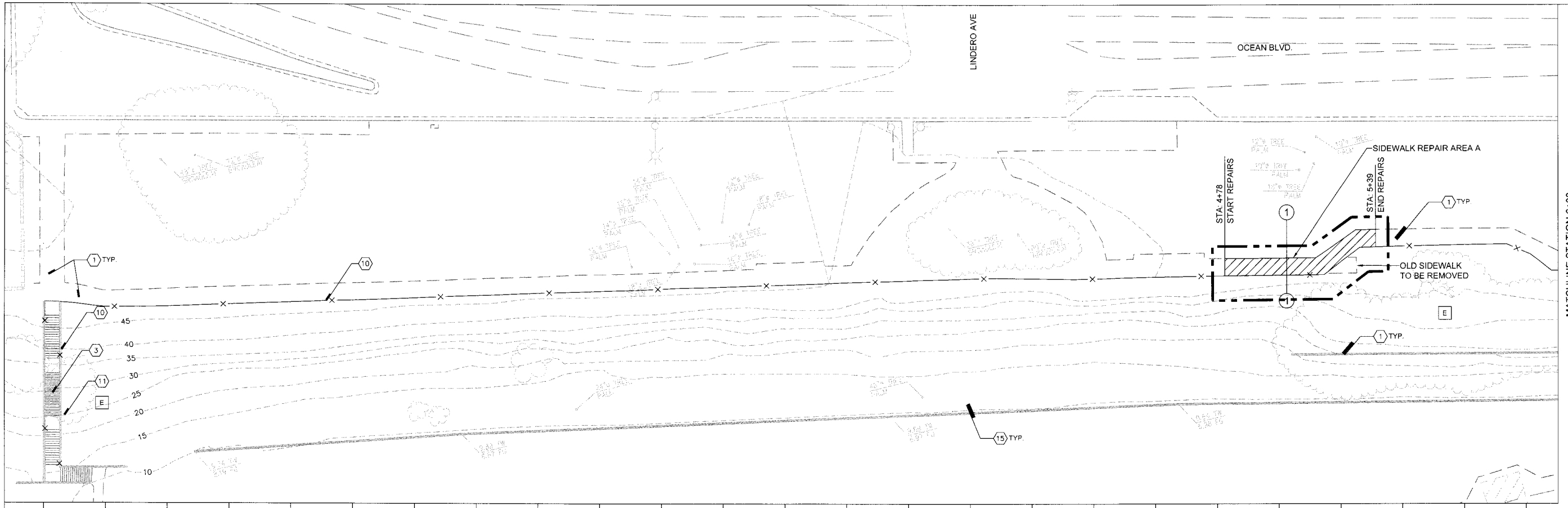

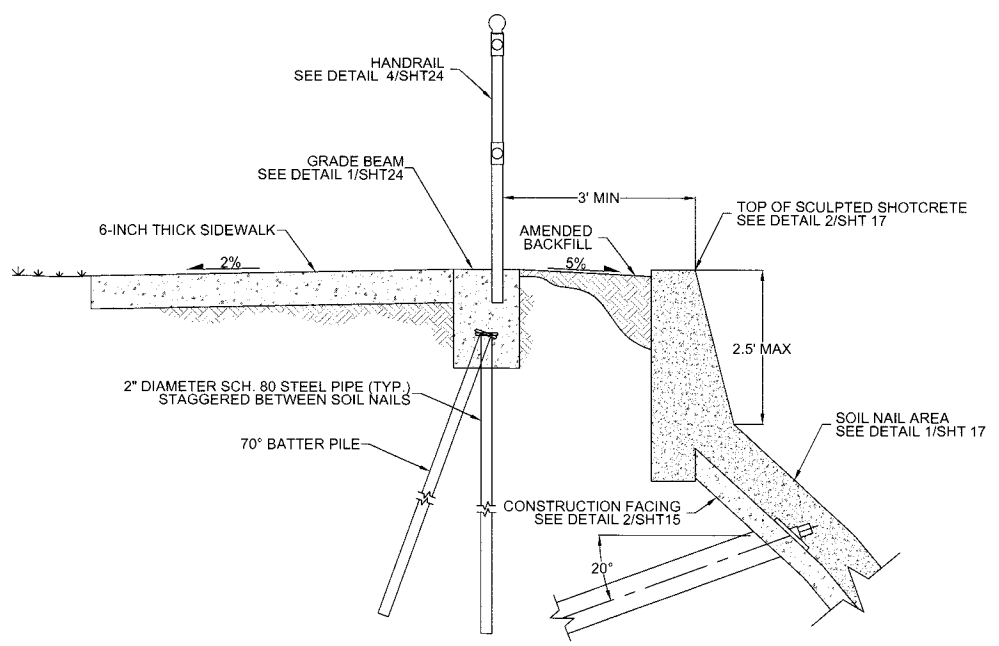

1 UNDERMINED SIDEWALK REPAIR SECTION
NOT TO SCALE

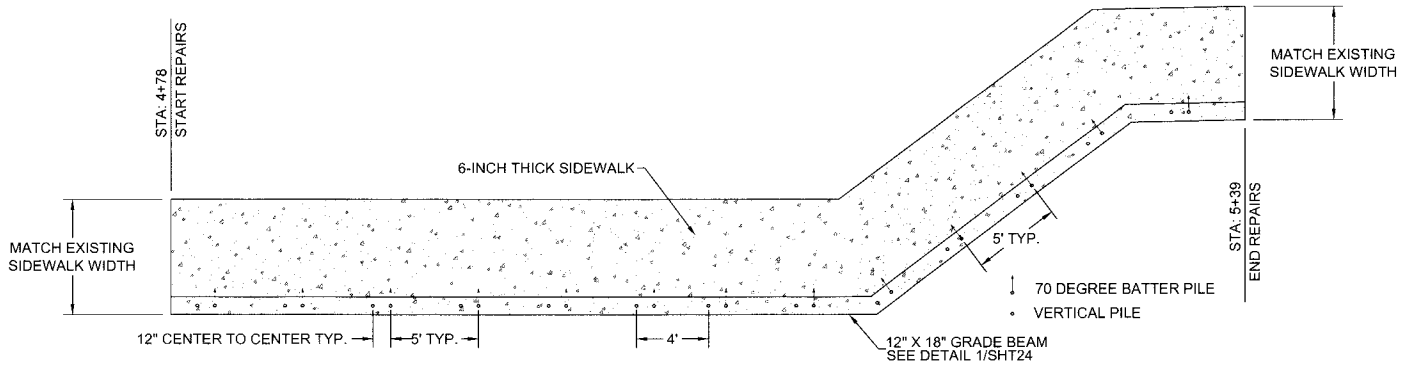

A GRADE BEAM AND SIDEWALK PLAN VIEW
SCALE IN FEET

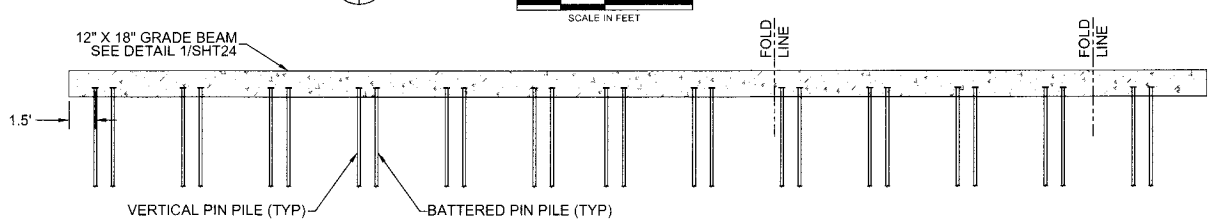

B GRADE BEAM AND SIDEWALK ELEVATION VIEW
SCALE IN FEET

LEGEND

- REPAIR AREA; REMOVE/DEMOLISH
- NEW CONCRETE
- EXISTING CONCRETE
- E EXISTING VEGETATION PROTECT-IN-PLACE
- EXISTING GABION WALL
- 45 EXISTING TOPOGRAPHIC CONTOUR
- 1 EXISTING SIDEWALK
- 2 EXISTING BIKE PATH
- 3 EXISTING STAIRS
- 4 EXISTING UTILITY BOXES
- 5 EXISTING TELEPHONE POLE
- 6 EXISTING ELECTRICAL TRANSFORMER
- 7 EXISTING RETAINING WALL
- 8 EXISTING GABION WALL
- 9 EXISTING RAMP
- 10 EXISTING HANDRAIL
- 11 EXISTING LIGHT POLE
- 12 EXISTING CONCRETE CULVERT
- 13 EXISTING SOIL NAIL WALL
- 14 VEHICULAR ACCESS
- 15 EXISTING 2" ø IRRIGATION LINE AT BOTTOM OF SLOPE
- # PROTECT IN PLACE

CONSTRUCTION NOTES

1. REMOVE EXISTING SIDEWALK AND RAILING, SAW CUT ENDS.
2. DRIVE 2"Ø PIN PILES TO REFUSAL MIN. 10' EMBEDMENT PER DETAIL 1/SHT 24.
3. PLACE REBAR AND CAST GRADE BEAM.
4. BACKFILL AROUND GRADE BEAM & PREPARE SUBGRADE FOR SIDEWALK.
5. CAST SIDEWALK. MATCH EXISTING SIDEWALK JOINT AND PATTERN & WIDTH.
6. INSTALL HANDRAIL PER DETAIL 4/SHT 24.
7. RESOD ANY DISTURBED LAWN AREAS.
8. REFER TO IRRIGATION AND PLANTING SHEETS FOR OTHER IMPROVEMENTS.

Scale: 1" = 20'

KLEINFELDER
Bright People. Right Solutions.
620 West 16th Street
Long Beach, CA 90813
www.kleinfelder.com PH. 562-432-1696 FAX. 562-432-1796

S-2.0

REVISIONS

No.	DATE	SHEET	APPROVAL	DESCRIPTION

AS-BUILT: REF.

DESIGNED BY: RDL/KLF
DRAWN BY: JJS/KLF
DESIGN CHECK BY: DMC/KLF
DRAFTING CHECK BY: RDL/KLF

REGISTERED PROFESSIONAL ENGINEER MARIUSZ P. SIERADZKI No. C 56925 CIVIL STATE OF CALIFORNIA

OCEAN BOULEVARD EROSION AND ENHANCEMENT PROJECT, PHASE 2
PLAN VIEWS STA. 0+00 TO STA. 6+00

GRAPHIC SCALE 0 1 2 3
PAGE N/A
FIELD BOOK N/A

NO. R- 6959
JOB NO. PW8260 13
SHEET 18 OF 44
DRAWING NO. B-4562

LAST SAVED BY: jstewart
PLOT DATE: Oct. 18, 12 SAVED PATH: G:\124406_Long Beach Bluffs\100% Submittal

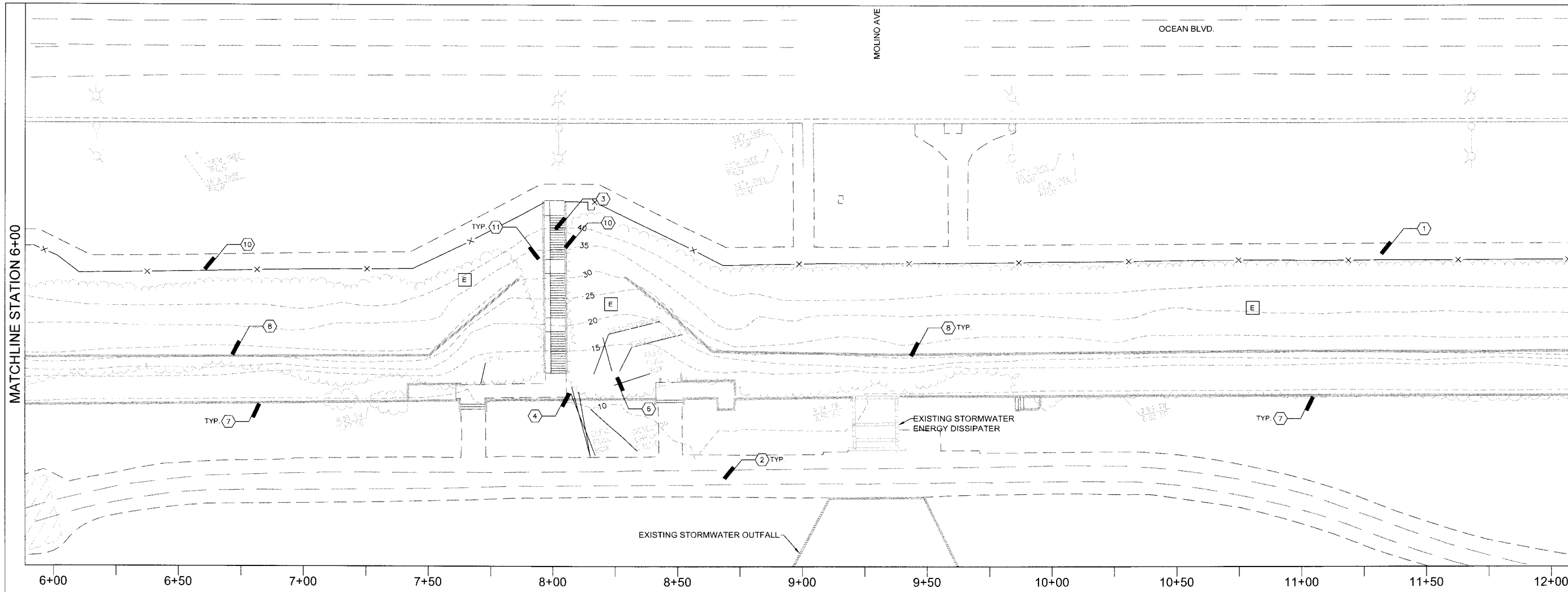

FOR REFERENCE ONLY

LEGEND

- REPAIR AREA; REMOVE/DEMOLISH
- NEW CONCRETE
- EXISTING CONCRETE
- E — EXISTING VEGETATION PROTECT-IN-PLACE
- EXISTING GABION WALL
- 45 — EXISTING TOPOGRAPHIC CONTOUR

1. EXISTING SIDEWALK
2. EXISTING BIKE PATH
3. EXISTING STAIRS
4. EXISTING UTILITY BOXES
5. EXISTING TELEPHONE POLE
6. EXISTING ELECTRICAL TRANSFORMER
7. EXISTING RETAINING WALL
8. EXISTING GABION WALL
9. EXISTING RAMP
10. EXISTING HANDRAIL
11. EXISTING LIGHT POLE
12. EXISTING CONCRETE CULVERT
13. EXISTING SOIL NAIL WALL
14. VEHICULAR ACCESS
15. EXISTING 2" ø IRRIGATION LINE AT BOTTOM OF SLOPE
- # PROTECT IN PLACE

0 20 40
Scale: 1" = 20'

KLEINFELDER
Bright People. Right Solutions.
620 West 16th Street
Long Beach, CA 90813
www.kleinfelder.com PH. 562-432-1696 FAX. 562-432-1796

S-2.1

REVISIONS

No.	DATE	SHEET	APPROVAL	DESCRIPTION

AS-BUILT: REF.

DESIGNED BY: RDL/KLF
DRAWN BY: JJS/KLF
DESIGN CHECK BY: DMC/KLF
DRAFTING CHECK BY: RDL/KLF

REGISTERED PROFESSIONAL ENGINEER MARIUS P. SIERADZKI No. C 56925 CIVIL STATE OF CALIFORNIA

OCEAN BOULEVARD EROSION AND ENHANCEMENT PROJECT, PHASE 2
PLAN VIEWS STA. 6+00 TO STA. 12+00

GRAPHIC SCALE 0 1 2 3

FIELD BOOK N/A
PAGE N/A

NO. R- 6959
JOB NO. PW8260 13
SHEET 19 OF 44
DRAWING NO. B-4562

LAST SAVED BY: jstewart
PLOT DATE: Oct. 18, 12 SAVED PATH: G:\124406_Long Beach Bluffs\100% Submittal

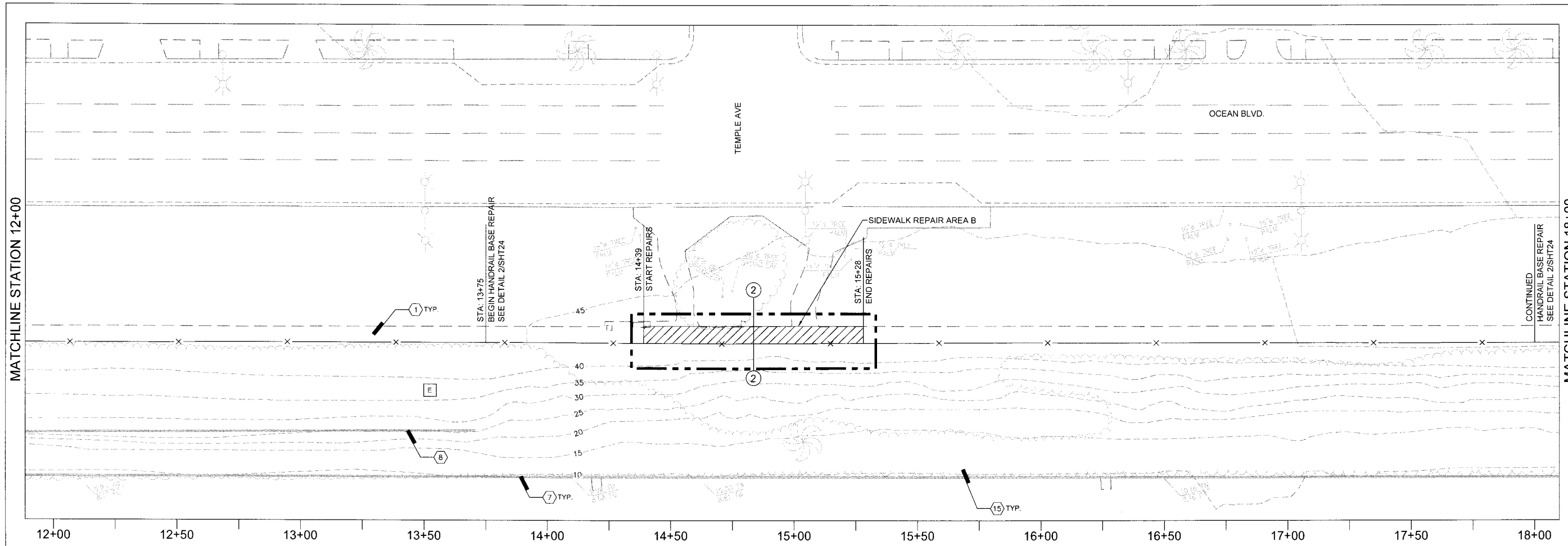

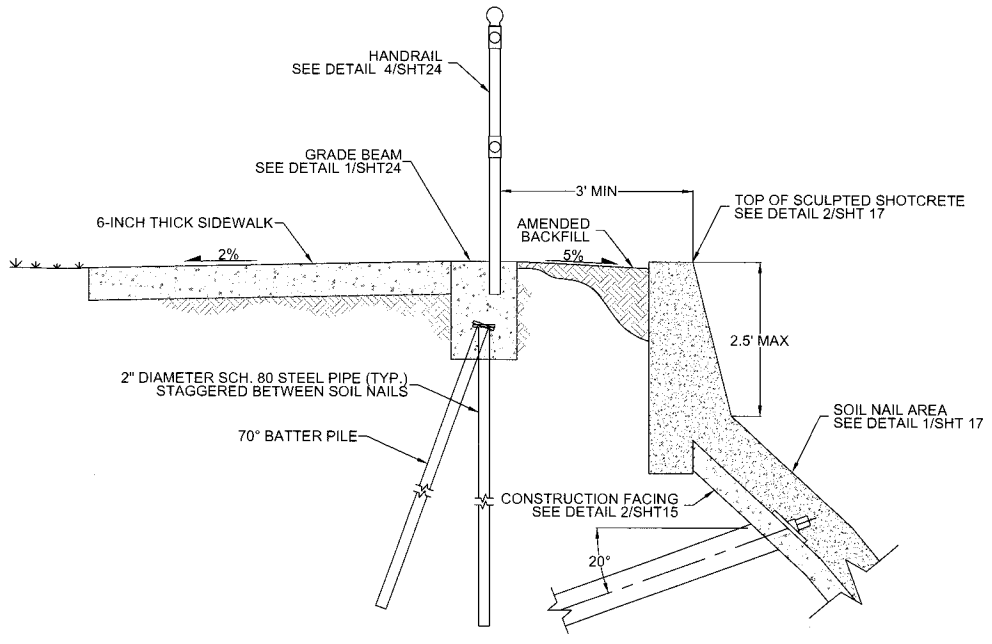

2 UNDERMINED SIDEWALK REPAIR SECTION
NOT TO SCALE

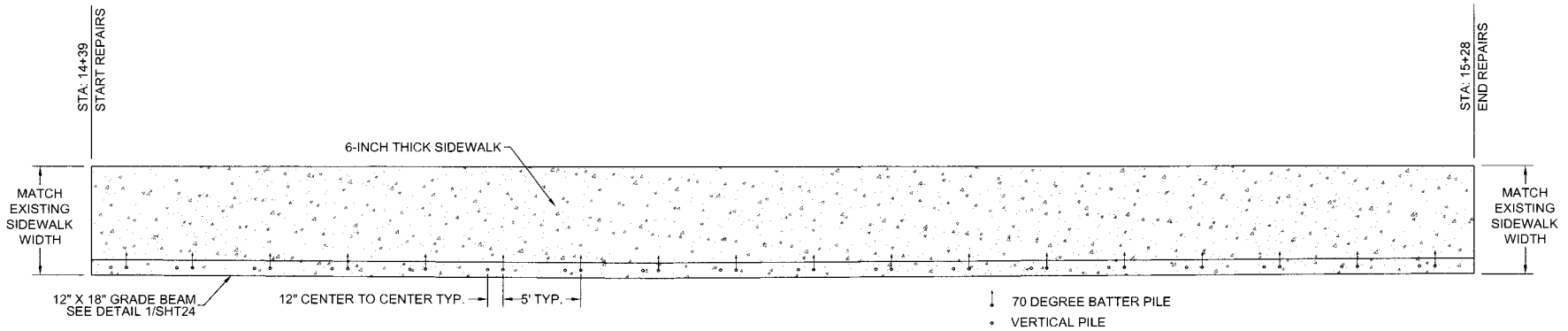

A GRADE BEAM PLAN VIEW
SCALE IN FEET

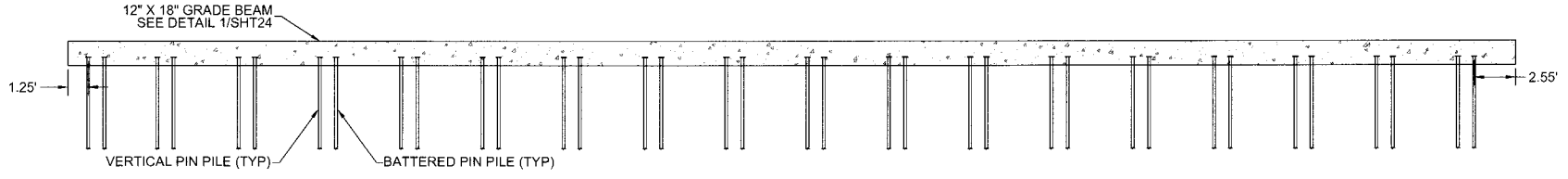

B GRADE BEAM ELEVATION VIEW
SCALE IN FEET

LEGEND

- REPAIR AREA; REMOVE/DEMOLISH
- NEW CONCRETE
- EXISTING CONCRETE
- E EXISTING VEGETATION PROTECT-IN-PLACE
- EXISTING GABION WALL
- 45 EXISTING TOPOGRAPHIC CONTOUR
- 1 EXISTING SIDEWALK
- 2 EXISTING BIKE PATH
- 3 EXISTING STAIRS
- 4 EXISTING UTILITY BOXES
- 5 EXISTING TELEPHONE POLE
- 6 EXISTING ELECTRICAL TRANSFORMER
- 7 EXISTING RETAINING WALL
- 8 EXISTING GABION WALL
- 9 EXISTING RAMP
- 10 EXISTING HANDRAIL
- 11 EXISTING LIGHT POLE
- 12 EXISTING CONCRETE CULVERT
- 13 EXISTING SOIL NAIL WALL
- 14 VEHICULAR ACCESS
- 15 EXISTING 2" ø IRRIGATION LINE AT BOTTOM OF SLOPE
- # PROTECT IN PLACE

CONSTRUCTION NOTES

1. REMOVE EXISTING SIDEWALK AND RAILING, SAW CUT ENDS.
2. DRIVE 2"Ø PIN PILES TO REFUSAL MIN. 10' EMBEDMENT PER DETAIL 1/SHT 24.
3. PLACE REBAR AND CAST GRADE BEAM.
4. BACKFILL AROUND GRADE BEAM & PREPARE SUBGRADE FOR SIDEWALK.
5. CAST SIDEWALK. MATCH EXISTING SIDEWALK JOINT AND PATTERN & WIDTH.
6. INSTALL HANDRAIL PER DETAIL 4/SHT 24.
7. RESOD ANY DISTURBED LAWN AREAS.
8. REFER TO IRRIGATION AND PLANTING SHEETS FOR OTHER IMPROVEMENTS.

Scale: 1" = 20'

KLEINFELDER
Bright People. Right Solutions.
620 West 16th Street
Long Beach, CA 90813
www.kleinfelder.com PH. 562-432-1696 FAX. 562-432-1796

S-2.2

REVISIONS

No.	DATE	SHEET	APPROVAL	DESCRIPTION

AS-BUILT: REF.

DESIGNED BY: RDL/KLF
DRAWN BY: JJS/KLF
DESIGN CHECK BY: DMC/KLF
DRAFTING CHECK BY: RDL/KLF

REGISTERED PROFESSIONAL ENGINEER MARIUSZ P. SIERADZKI No. C56925 CIVIL STATE OF CALIFORNIA

OCEAN BOULEVARD EROSION AND ENHANCEMENT PROJECT, PHASE 2
PLAN VIEWS STA. 12+00 TO STA. 18+00

GRAPHIC SCALE 0 1 2 3
PAGE N/A
FIELD BOOK N/A

NO. R- 6959
JOB NO. PW8260 13
SHEET 20 OF 44
DRAWING NO. B-4562

LAST SAVED BY: jstewart
PLOT DATE: Oct. 18, 12 SAVED PATH: G:\124406_Long Beach Bluffs\100% Submittal

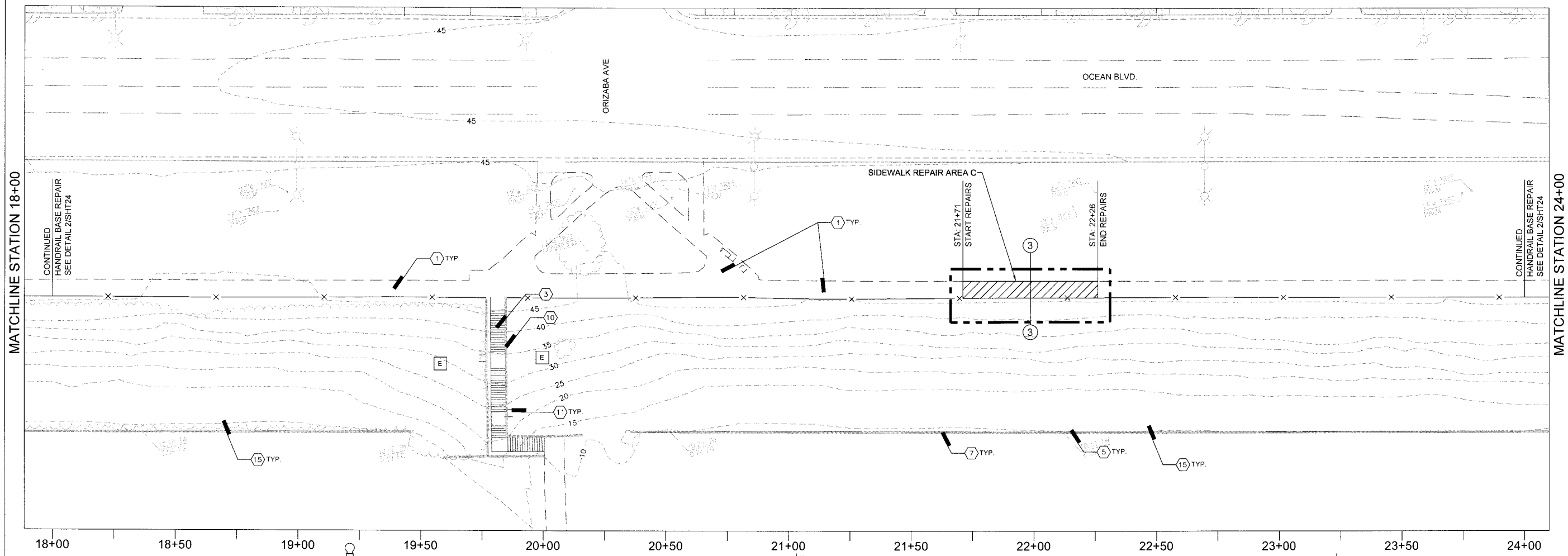

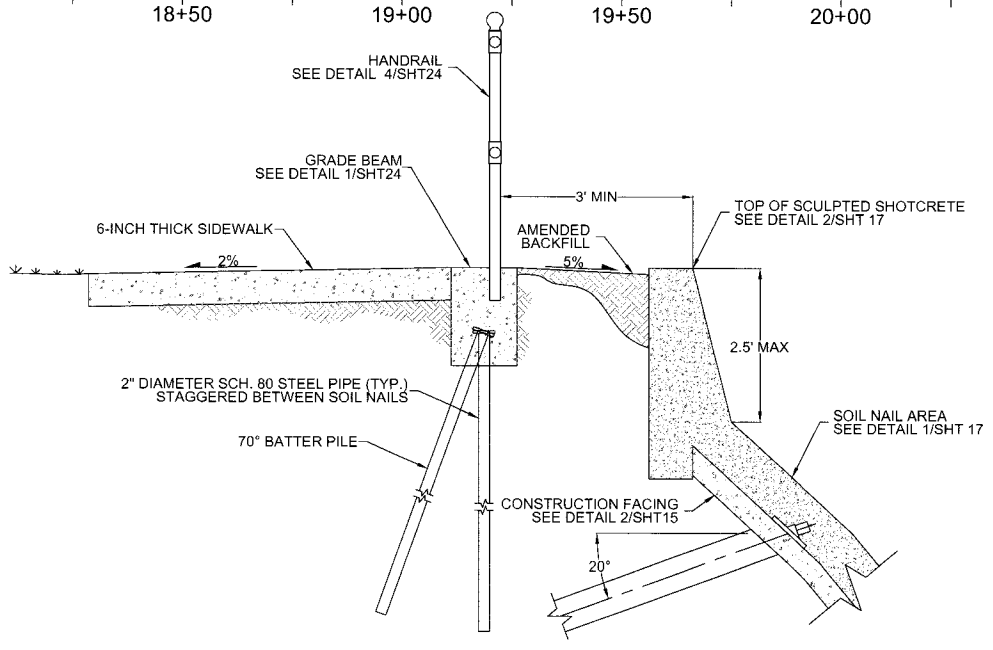

3 / 21 **UNDERMINED SIDEWALK REPAIR SECTION**

NOT TO SCALE

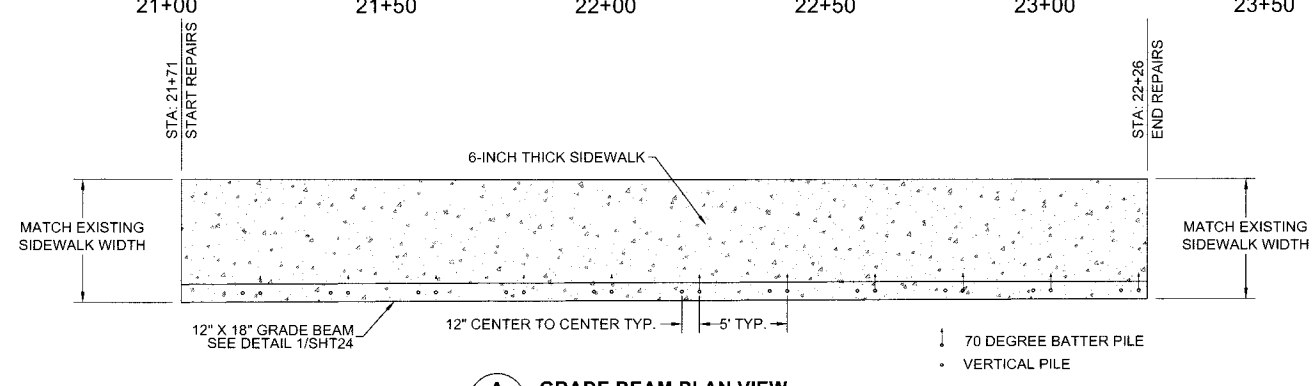

A / 21 **GRADE BEAM PLAN VIEW**

SCALE IN FEET

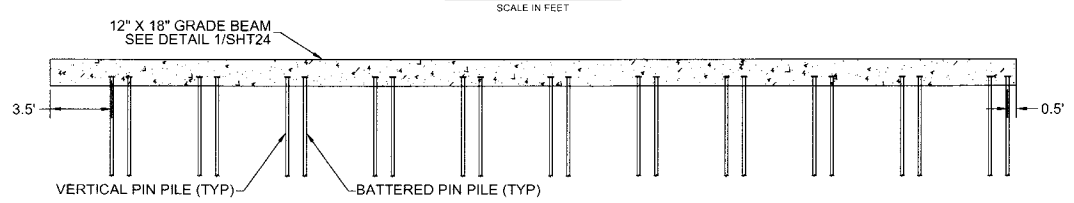

B / 21 **GRADE BEAM ELEVATION VIEW**

SCALE IN FEET

CONSTRUCTION NOTES

1. REMOVE EXISTING SIDEWALK AND RAILING, SAW CUT ENDS.
2. DRIVE 2"Ø PIN PILES TO REFUSAL MIN. 10' EMBEDMENT PER DETAIL 1/SHT 24.
3. PLACE REBAR AND CAST GRADE BEAM.
4. BACKFILL AROUND GRADE BEAM & PREPARE SUBGRADE FOR SIDEWALK.
5. CAST SIDEWALK. MATCH EXISTING SIDEWALK JOINT AND PATTERN & WIDTH.
6. INSTALL HANDRAIL PER DETAIL 4/SHT 24.
7. RESOD ANY DISTURBED LAWN AREAS.
8. REFER TO IRRIGATION AND PLANTING SHEETS FOR OTHER IMPROVEMENTS.

LEGEND

- REPAIR AREA; REMOVE/DEMOLISH
- NEW CONCRETE
- EXISTING CONCRETE
- E — EXISTING VEGETATION PROTECT-IN-PLACE
- EXISTING GABION WALL
- 45 — EXISTING TOPOGRAPHIC CONTOUR

1. EXISTING SIDEWALK
2. EXISTING BIKE PATH
3. EXISTING STAIRS
4. EXISTING UTILITY BOXES
5. EXISTING TELEPHONE POLE
6. EXISTING ELECTRICAL TRANSFORMER
7. EXISTING RETAINING WALL
8. EXISTING GABION WALL
9. EXISTING RAMP
10. EXISTING HANDRAIL
11. EXISTING LIGHT POLE
12. EXISTING CONCRETE CULVERT
13. EXISTING SOIL NAIL WALL
14. VEHICULAR ACCESS
15. EXISTING 2" ø IRRIGATION LINE AT BOTTOM OF SLOPE
- # PROTECT IN PLACE

Scale: 1" = 20'

KLEINFELDER
Bright People. Right Solutions.
620 West 16th Street
Long Beach, CA 90813
www.kleinfelder.com PH. 562-432-1696 FAX. 562-432-1796

S-2.3

REVISIONS

No.	DATE	SHEET	APPROVAL	DESCRIPTION

AS-BUILT: REF.

DESIGNED BY: RDL/KLF
DRAWN BY: JJS/KLF
DESIGN CHECK BY: DMC/KLF
DRAFTING CHECK BY: RDL/KLF

REGISTERED PROFESSIONAL ENGINEER MARIUS Z. P. SIERADZKI No. C56925 CIVIL STATE OF CALIFORNIA

OCEAN BOULEVARD EROSION AND ENHANCEMENT PROJECT, PHASE 2
PLAN VIEWS STA. 18+00 TO STA. 24+00

GRAPHIC SCALE 0 1 2 3

PAGE N/A

FIELD BOOK N/A

NO. R- 6959

JOB NO. PW8260 13

SHEET 21 OF 44

DRAWING NO. B-4562

LAST SAVED BY: jstewart
PLOT DATE: Oct. 18, 12 SAVED PATH: G:\124406_Long Beach Bluffs\100% Submittal

MATCHLINE STATION 24+00

MATCHLINE STATION 30+00

PALOMA AVE

OCEAN BLVD.

CONTINUED HANDRAIL BASE REPAIR SEE DETAIL 2/SHT24

SIDEWALK REPAIR AREA E

STA: 29+25 START REPAIRS

STA: 29+50 END REPAIRS

CONTINUED HANDRAIL BASE REPAIR SEE DETAIL 2/SHT24

TYP (1)

(9)

(4)

(4)

45 40 35 30 25 20 15 10

E

(15) TYP.

TYP. (5)

RAMP UNDERPINNING AREA D
APPROX. START STA.: 27+33
APPROX. END STA.: 27+43
10 PILES MINIMUM
SEE DETAIL 3/SHT24

(7)

24+00 24+50 25+00 25+50 26+00 26+50 27+00 27+50 28+00 28+50 29+00 29+50 30+00

HANDRAIL SEE DETAIL 4/SHT24

GRADE BEAM SEE DETAIL 1/SHT24

3' MIN

6-INCH THICK SIDEWALK

2%

9" MAX

2.5' MAX

2" DIAMETER SCH. 80 STEEL PIPE (TYP.)

70° BATTER PILE

REGRADE SLOPE

EXISTING SLOPE

4 UNDERMINED SIDEWALK REPAIR SECTION
NOT TO SCALE

STA: 29+25 START REPAIRS

STA: 29+50 END REPAIRS

6-INCH THICK SIDEWALK

MATCH EXISTING SIDEWALK WIDTH

MATCH EXISTING SIDEWALK WIDTH

12" X 18" GRADE BEAM SEE DETAIL 1/SHT24

5' TYP.

12" CENTER TO CENTER TYP.

A 22 GRADE BEAM PLAN VIEW
SCALE IN FEET

12" X 18" GRADE BEAM SEE DETAIL 1/SHT24

2'

2'

VERTICAL PIN PILE (TYP)

BATTERED PIN PILE (TYP)

B 22 GRADE BEAM ELEVATION VIEW
SCALE IN FEET

70 DEGREE BATTER PILE

VERTICAL PILE

LEGEND

- REPAIR AREA; REMOVE/DEMOLISH
- NEW CONCRETE
- EXISTING CONCRETE
- E EXISTING VEGETATION PROTECT-IN-PLACE
- EXISTING GABION WALL
- 45 EXISTING TOPOGRAPHIC CONTOUR

(1) EXISTING SIDEWALK
(2) EXISTING BIKE PATH
(3) EXISTING STAIRS
(4) EXISTING UTILITY BOXES
(5) EXISTING TELEPHONE POLE
(6) EXISTING ELECTRICAL TRANSFORMER
(7) EXISTING RETAINING WALL
(8) EXISTING GABION WALL
(9) EXISTING RAMP
(10) EXISTING HANDRAIL
(11) EXISTING LIGHT POLE
(12) EXISTING CONCRETE CULVERT
(13) EXISTING SOIL NAIL WALL
(14) VEHICULAR ACCESS
(15) EXISTING 2" ø IRRIGATION LINE AT BOTTOM OF SLOPE
(#) PROTECT IN PLACE

0 20 40
Scale 1" = 20'

CONSTRUCTION NOTES

1. REMOVE EXISTING SIDEWALK AND RAILING, SAW CUT ENDS.
2. DRIVE 2"Ø PIN PILES TO REFUSAL MIN. 10' EMBEDMENT PER DETAIL 1/SHT 24.
3. PLACE REBAR AND CAST GRADE BEAM.
4. BACKFILL AROUND GRADE BEAM & PREPARE SUBGRADE FOR SIDEWALK.
5. CAST SIDEWALK. MATCH EXISTING SIDEWALK JOINT AND PATTERN & WIDTH.
6. INSTALL HANDRAIL PER DETAIL 4/SHT 24.
7. RESOD ANY DISTURBED LAWN AREAS.
8. AT A MINIMUM APPLY HYDROSEED AT SLOPED AREAS.

REVISIONS

No.	DATE	SHEET	APPROVAL	DESCRIPTION

DESIGNED BY: RDL/KLF
DRAWN BY: JJS/KLF
DESIGN CHECK BY: DMC/KLF
DRAFTING CHECK BY: RDL/KLF
AS-BUILT:
REF.

REGISTERED PROFESSIONAL ENGINEER MANUEL P. SIERADZKI No. C 66929 CIVIL STATE OF CALIFORNIA

OCEAN BOULEVARD EROSION AND ENHANCEMENT PROJECT, PHASE 2 PLAN VIEWS STA. 24+00 TO STA. 30+00

GRAPHIC SCALE 0 1 2 3
PAGE N/A
FIELD BOOK N/A

NO. R- 6959
JOB NO. PW8260 13
SHEET 22 OF 44
DRAWING NO. B-4562

KLEINFELDER
Bright People. Right Solutions.
620 West 16th Street
Long Beach, CA 90813
www.kleinfelder.com PH. 562-432-1696 FAX. 562-432-1796

S-2.4

LAST SAVED BY: jstewart
PLOT DATE: Oct. 18, 12 SAVED PATH: G:\124406_Long Beach Bluffs\100% Submittal

MATCHLINE STATION 30+00

CORONADO AV.

OCEAN BLVD.

CONTINUED HANDRAIL BASE REPAIR SEE DETAIL 2/SHT24

RAMP UNDERPINNING AREA G
APPROX. START STA.: 30+64
APPROX. END STA.: 30+73
10 PILES MINIMUM
SEE DETAIL 3/SHT24

RAMP UNDERPINNING AREA F
APPROX. START STA.: 30+56
APPROX. END STA.: 30+65
10 PILES MINIMUM
SEE DETAIL 3/SHT24

STA. 32+83.47
OPTION 1 START

STA. 33+10
OPTION 2 START

SIDEWALK REPAIR AREA H

OPTION 1

OPTION 2

STA. 35+66
OPTION 2 END

STA. 35+86.77
OPTION 1 END

STA. 36+00
END HANDRAIL BASE REPAIR
SEE DETAIL 2/SHT24

RAMP UNDERPINNING AREA I
APPROX. START STA.: 34+25
APPROX. END STA.: 34+41
15 PILES MINIMUM
SEE DETAIL 3/SHT24

RAMP UNDERPINNING AREA J
APPROX. START STA.: 35+35
APPROX. END STA.: 35+50
15 PILES MINIMUM
SEE DETAIL 3/SHT24

TYP. (11)

TYP. (5)

30+00 30+50 31+00 31+50 32+00 32+50 33+00 33+50 34+00 34+50 35+00 35+50 36+00

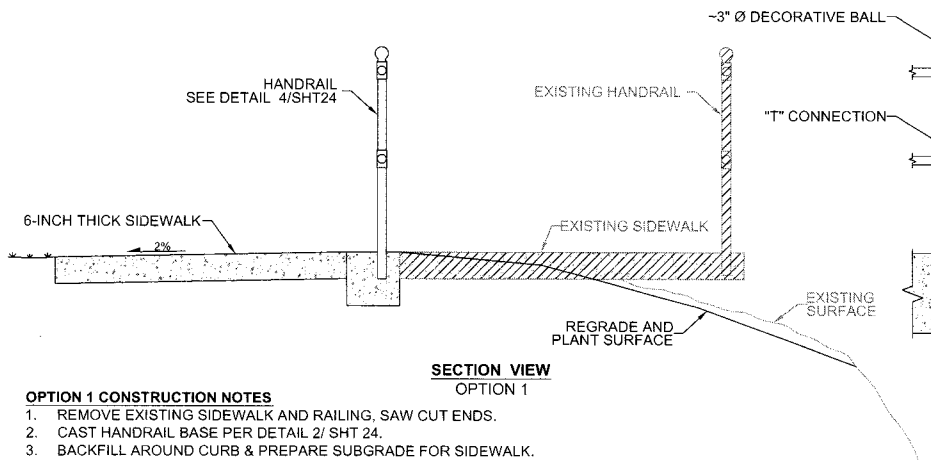

SECTION VIEW
OPTION 1

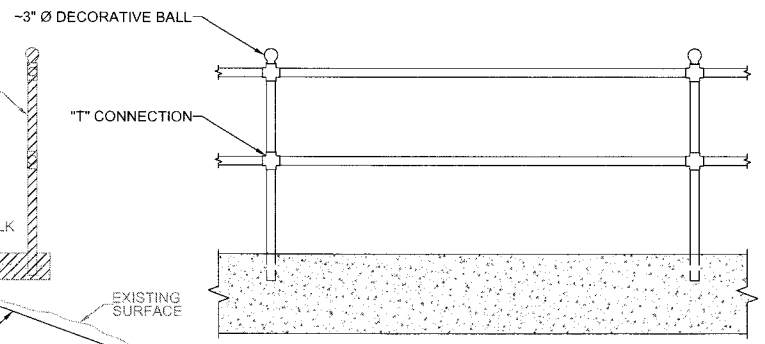

ELEVATION VIEW
OPTION 1

OPTION 1 CONSTRUCTION NOTES

1. REMOVE EXISTING SIDEWALK AND RAILING, SAW CUT ENDS.
2. CAST HANDRAIL BASE PER DETAIL 2/ SHT 24.
3. BACKFILL AROUND CURB & PREPARE SUBGRADE FOR SIDEWALK.
4. CAST SIDEWALK. MATCH EXISTING SIDEWALK JOINT AND PATTERN & WIDTH.
5. INSTALL HANDRAIL PER DETAIL 4/ SHT 24.
6. RESOD ANY DISTURBED LAWN AREAS.
7. AT A MINIMUM, THERE IS NO MORE THAN A 30" DROP WITHIN 3FT FROM HANDRAIL AT SLOPED AREA REGRADE ACCORDINGLY.
8. REFER TO IRRIGATION AND PLANTING SHEETS FOR OTHER IMPROVEMENTS.
9. REGRADE, PREPARE FOR PLANTING, INSTALL PLANT MATERIALS AND JUTE MATTING AS SPECIFIED FOR DISTURBED REPAIR AREAS AT LOCATION OF REMOVED SIDEWALK.

5 / 23 **UNDERMINED SIDEWALK REPAIR, OPTION 1**
NOT TO SCALE

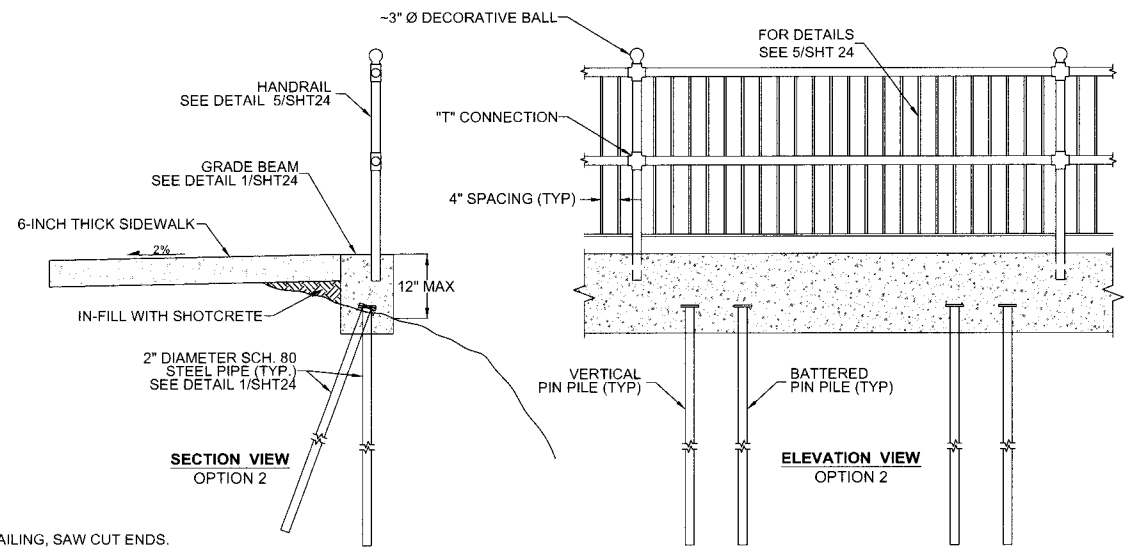

SECTION VIEW
OPTION 2

ELEVATION VIEW
OPTION 2

OPTION 2 CONSTRUCTION NOTES

1. REMOVE EXISTING SIDEWALK AND RAILING, SAW CUT ENDS.
2. DRIVE 2"Ø PIN PILES TO REFUSAL MIN. 10' EMBEDMENT PER DETAIL 1/SHT 24.
3. PLACE REBAR AND CAST GRADE BEAM.
4. BACKFILL AROUND GRADE BEAM & PREPARE SUBGRADE FOR SIDEWALK.
5. CAST SIDEWALK. MATCH EXISTING SIDEWALK JOINT AND PATTERN & WIDTH.
6. INSTALL HANDRAIL WITH 4" MAXIMUM WIDTH OPENING PER DETAIL 5/SHT 24.
7. RESOD ANY DISTURBED LAWN AREAS.
8. REFER TO IRRIGATION AND PLANTING SHEETS FOR OTHER IMPROVEMENTS.

5 / 23 **UNDERMINED SIDEWALK REPAIR, OPTION 2**
NOT TO SCALE

LEGEND

- REPAIR AREA; OPTION 1
- REPAIR AREA; OPTION 2
- REPAIR AREA; REMOVE/DEMOLISH
- NEW CONCRETE
- EXISTING CONCRETE
- E — EXISTING VEGETATION PROTECT-IN-PLACE
- EXISTING GABION WALL
- 45 — EXISTING TOPOGRAPHIC CONTOUR
- CONSTRUCTION LIMITS

(1) EXISTING SIDEWALK
(2) EXISTING BIKE PATH
(3) EXISTING STAIRS
(4) EXISTING UTILITY BOXES
(5) EXISTING TELEPHONE POLE
(6) EXISTING ELECTRICAL TRANSFORMER
(7) EXISTING RETAINING WALL
(8) EXISTING GABION WALL
(9) EXISTING RAMP
(10) EXISTING HANDRAIL
(11) EXISTING LIGHT POLE
(12) EXISTING CONCRETE CULVERT
(13) EXISTING SOIL NAIL WALL
(14) VEHICULAR ACCESS
(15) EXISTING 2" ø IRRIGATION LINE AT BOTTOM OF SLOPE
(#) PROTECT IN PLACE

0 20 40
Scale: 1" = 20'

KLEINFELDER
Bright People. Right Solutions.
620 West 16th Street
Long Beach, CA 90813
PH. 562-432-1696 FAX. 562-432-1796
www.kleinfelder.com

S-2.5

REVISIONS

No.	DATE	SHEET	APPROVAL	DESCRIPTION

AS-BUILT: REF.

DESIGNED BY: RDL/KLF
DRAWN BY: JJS/KLF
DESIGN CHECK BY: DMC/KLF
DRAFTING CHECK BY: RDL/KLF

REGISTERED PROFESSIONAL ENGINEER
RAFAEL P. SIERRA
No. C 69295
CIVIL
STATE OF CALIFORNIA

OCEAN BOULEVARD EROSION AND ENHANCEMENT PROJECT, PHASE 2
PLAN VIEWS STA. 30+00 TO STA. 36+00

GRAPHIC SCALE 0 1 2 3
FIELD BOOK N/A
PAGE N/A

NO. R- 6959
JOB NO. PW8260 13
SHEET 23 OF 44
DRAWING NO. B-4562

LAST SAVED BY: jstewart
PLOT DATE: Oct. 16, 12 SAVED PATH: G:\124406_Long Beach Bluffs\100% Submittal

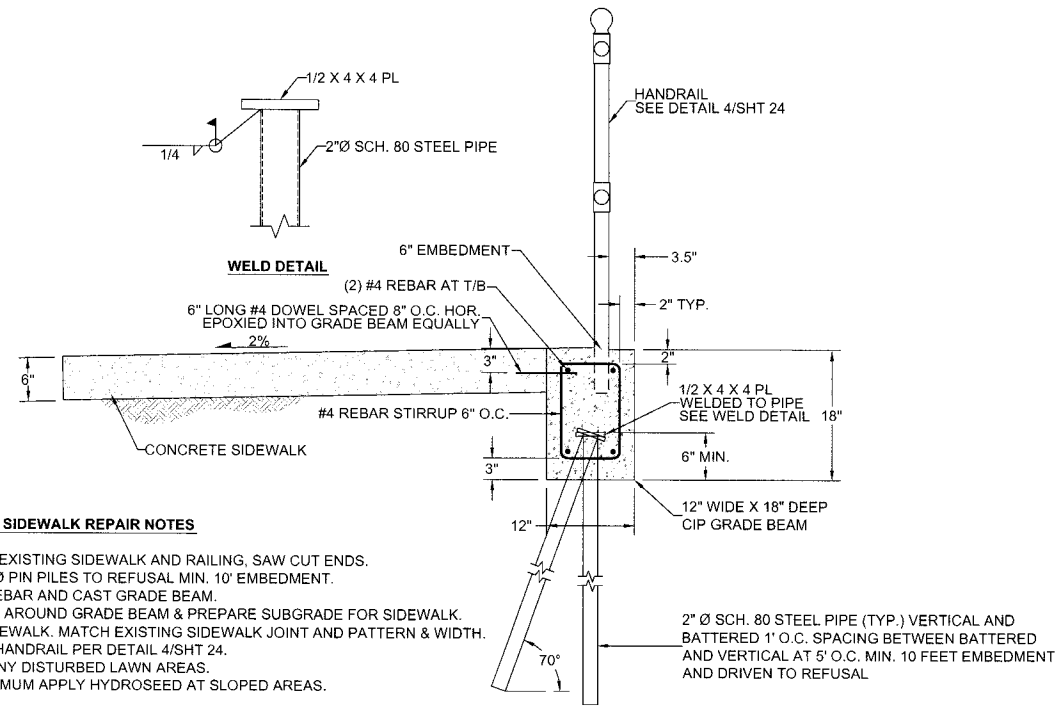

UNDERMINED SIDEWALK REPAIR NOTES

1. REMOVE EXISTING SIDEWALK AND RAILING, SAW CUT ENDS.
2. DRIVE 2"Ø PIN PILES TO REFUSAL MIN. 10' EMBEDMENT.
3. PLACE REBAR AND CAST GRADE BEAM.
4. BACKFILL AROUND GRADE BEAM & PREPARE SUBGRADE FOR SIDEWALK.
5. CAST SIDEWALK. MATCH EXISTING SIDEWALK JOINT AND PATTERN & WIDTH.
6. INSTALL HANDRAIL PER DETAIL 4/SHT 24.
7. RESOD ANY DISTURBED LAWN AREAS.
8. AT A MINIMUM APPLY HYDROSEED AT SLOPED AREAS.

1 / 24 UNDERMINED SIDEWALK REPAIR DETAIL
NOT TO SCALE

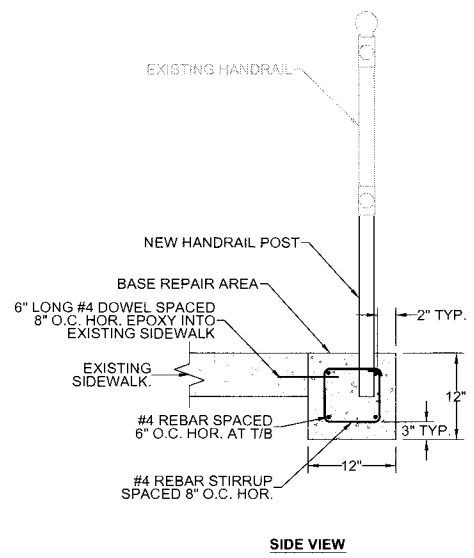

SIDE VIEW

BASE HANDRAIL REPAIR NOTES FOR DETAIL 2

1. REMOVE HANDRAIL POST LOWER SECTION
2. SAW CUT AND REMOVE SPALLED / DAMAGED CONCRETE
3. INSTALL DOWELS INTO EXISTING SIDEWALK
4. PLACE REBAR AND CONCRETE
5. REPLACE LOWER HANDRAIL POST, SEE DETAIL 4/SHT 24
6. APPLY PROTECTIVE COATING. MATCH EXISTING RAILING COLOR

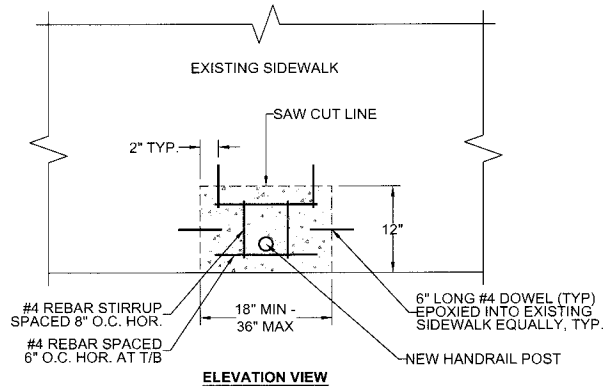

ELEVATION VIEW

2 / 24 BASE HANDRAIL REPAIR
NOT TO SCALE

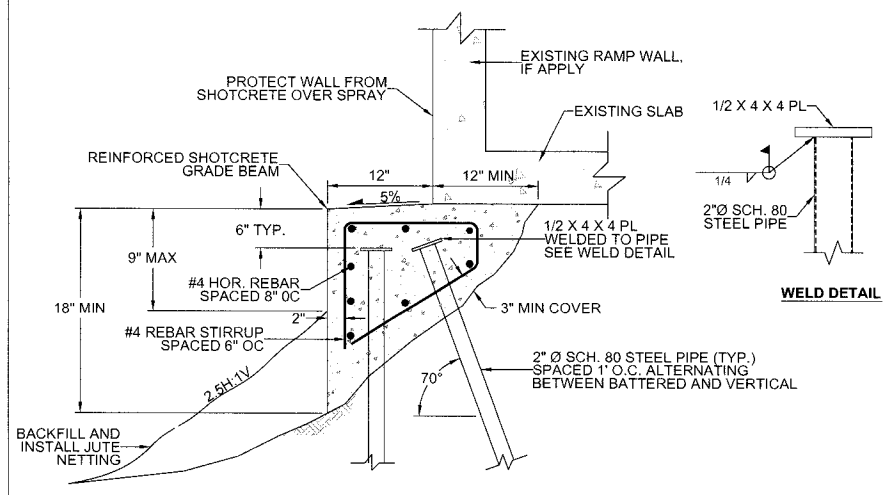

UNDERPINNING CONSTRUCTION SEQUENCE

1. INSTALL PIN PILES DRIVEN TO REFUSAL WITH 90 LB JACK HAMMER WITH MIN. 10' EMBEDMENT.
2. EXCAVATE MINIMAL SOIL TO PROVIDE MINIMUM 18" X 18" AREA FOR GRADE BEAM.
3. WELD PLATES TO TOP OF PILES.
4. PLACE REBAR AND SECURE WITH TIEWIRE.
5. PLACE SHOTCRETE.
7. REPAIR ANY CRACKS IN WALL ABOVE UNDERPINNING AREA WITH NON-SHRINK GROUT.
8. PAINT CRACK REPAIRS TO MATCH SURROUNDING RAMP WALL COLOR & TEXTURE.
9. BACKFILL AGAINST GRADE BEAM WITH AMENDED SOIL AND COMPACT.
10. INSTALL JUTE NETTING AND HYDROSEED.

3 / 24 RAMP UNDERPINNING DETAIL
NOT TO SCALE

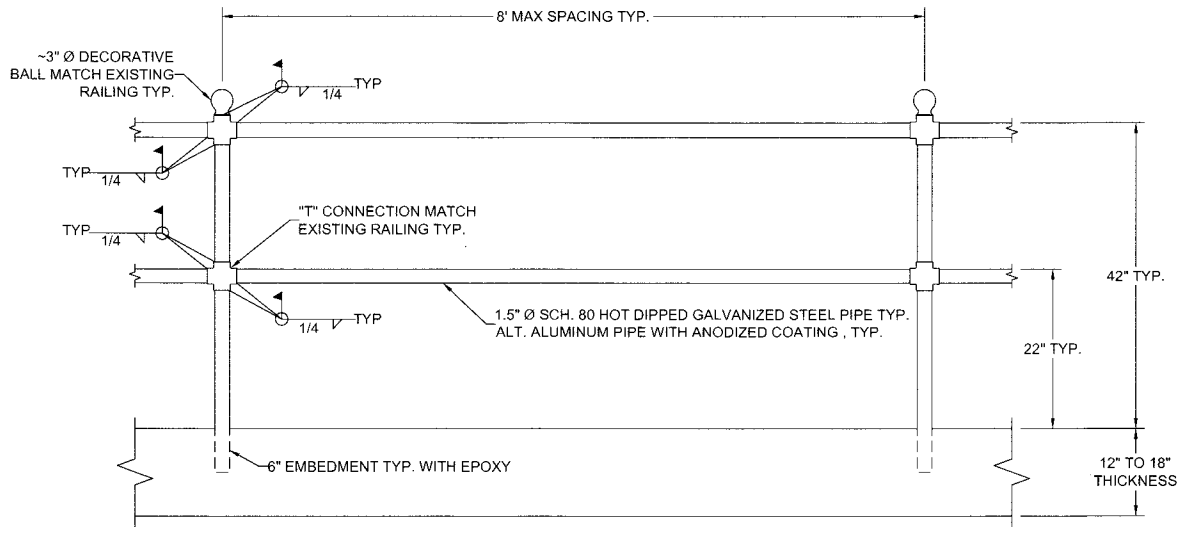

4 / 24 HANDRAIL DETAIL
NOT TO SCALE

HANDRAIL NOTES

1. FABRICATE STEEL HANDRAIL TO MATCH EXISTING.
2. FABRICATE AND INSTALL HANDRAIL PER SPECIFICATION 5500.
3. APPLY PROTECTIVE COATING. MATCH EXISTING RAILING COLOR.
4. REPAIR ADJACENT HANDRAILING AT EACH END OF REPAIR AREA AS REQUIRED PER SPECIFICATIONS 5500.

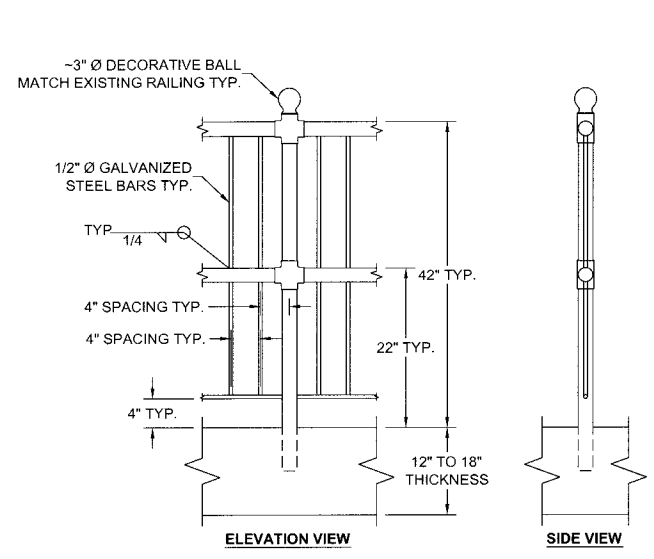

5 / 24 OPTION 2 HANDRAIL DETAIL
NOT TO SCALE

NOTE: REFER TO DETAIL 4/SHT24 FOR OTHER INFORMATION NOT SHOWN.

RAMP UNDERPINNING AREA D

RAMP UNDERPINNING AREA F

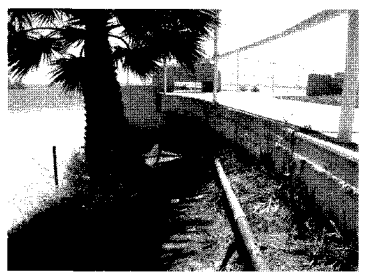
RAMP UNDERPINNING AREA G

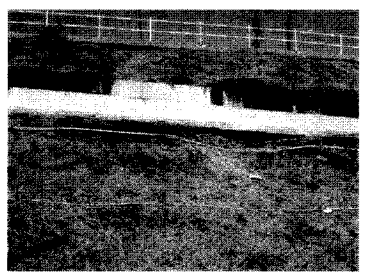
RAMP UNDERPINNING AREA I

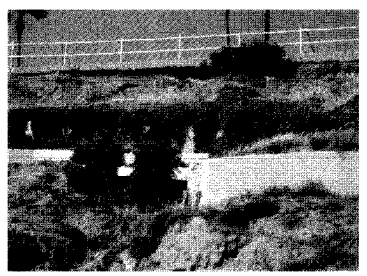
RAMP UNDERPINNING AREA J

REVISIONS

No.	DATE	SHEET	APPROVAL	DESCRIPTION
				AS-BUILT:
				REF.:

DESIGNED BY: RDL/KLF
DRAWN BY: JJS/KLF
DESIGN CHECK BY: DMC/KLF
DRAFTING CHECK BY: RDL/KLF

REGISTERED PROFESSIONAL ENGINEER * RAYMOND L. SIERADZKI * No. C59825 * CIVIL * STATE OF CALIFORNIA

OCEAN BOULEVARD EROSION AND ENHANCEMENT PROJECT, PHASE 2 STRUCTURAL DETAILS

GRAPHIC SCALE 0 1 2 3
PAGE N/A
FIELD BOOK N/A

NO. R- 6959
JOB NO. PW8260 13
SHEET 24 OF 44
DRAWING NO. B-4562

KLEINFELDER
Bright People. Right Solutions.
620 West 16th Street
Long Beach, CA 90813
www.kleinfelder.com PH. 562-432-1696 FAX. 562-432-1796

S-3.0

LAST SAVED BY: jstewart
PLOT DATE: Oct. 18, 12 SAVED PATH: G:\124406_Long Beach Bluffs\100% Submittal

AREAS UNDER REPAIR:
AS NEEDED, CONTRACTOR SHALL BE RESPONSIBLE TO REPAIR AND/OR REPLACE EXISTING PLANTING AND IRRIGATION DAMAGED DURING WORK TO BE DONE ON EXISTING CONCRETE WALKS AND RAMPS THAT ARE LOCATED WITHIN DESIGNATED REPAIR AREAS. REFER TO CIVIL PLANS FOR EXACT LOCATIONS.

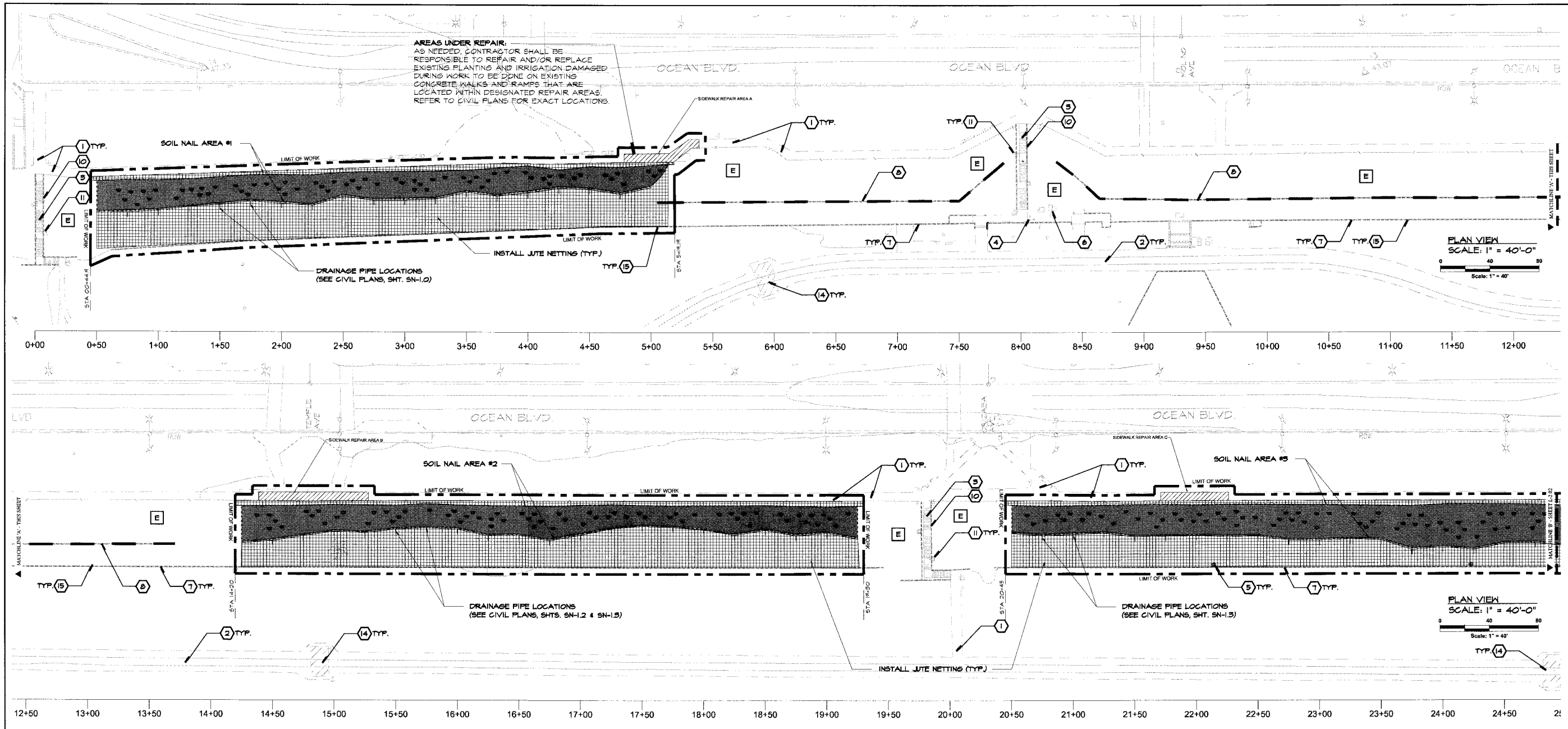

SLOPE LEGEND

- INSTALL JUTE NETTING PER SPECIFICATIONS (SECTION 300-9) AND AS SHOWN PER PLANS.
- CONSTRUCT SOIL NAIL AREA PER PLANS AND PROJECT SPECIFICATIONS
- E — EXISTING VEGETATION PROTECT-IN-PLACE
- EXISTING GABION WALL
- DRAINAGE PIPES (SEE CIVIL PLANS)
- PLANTER POCKET, TYP.

EXISTING CONDITIONS

	DESCRIPTION:	COMMENTS
1	EXISTING SIDEWALK	PROTECT-IN-PLACE
2	EXISTING BIKE PATH	PROTECT-IN-PLACE
3	EXISTING STAIRS	PROTECT-IN-PLACE
4	EXISTING UTILITY BOXES	PROTECT-IN-PLACE
5	EXISTING TELEPHONE POLE	PROTECT-IN-PLACE
6	EXISTING ELECTRICAL TRANSFORMER	PROTECT-IN-PLACE
7	EXISTING RETAINING WALL	PROTECT-IN-PLACE
8	EXISTING GABION WALL	PROTECT-IN-PLACE
9	EXISTING RAMP	PROTECT-IN-PLACE
10	EXISTING HANDRAIL	PROTECT-IN-PLACE
11	EXISTING LIGHT POLE	PROTECT-IN-PLACE
12	EXISTING CONCRETE CULVERT	PROTECT-IN-PLACE
13	EXISTING SOIL NAIL WALL	PROTECT-IN-PLACE
14	EXISTING VEHICULAR ACCESS	PROTECT-IN-PLACE
15	EXISTING 2" IRRIGATION LINE AT BOTTOM OF SLOPE	PROTECT-IN-PLACE

NOTE:
REFER TO SHEETS SN-1 THROUGH SN-4 FOR SOIL NAIL DESIGN.

NOTE:
CONTRACTOR SHALL BE RESPONSIBLE TO REPAIR OR REPLACE ANY DAMAGED EXISTING IMPROVEMENTS DESIGNATED TO BE PROTECTED-IN-PLACE AND/OR IMPROVEMENTS LOCATED OUTSIDE THE LIMITS-OF-WORK. CONTRACTOR SHALL PHOTOGRAPH AND RECORD WITH THE CITY THE CONDITION OF THE SITE PRIOR TO COMMENCEMENT OF THE WORK. THIS INCLUDES PROPOSED STAGING AREAS AND CONSTRUCTION ACCESS ROUTES.

0 40 80
Scale: 1" = 40'

100% DESIGN SUBMITTAL

31591 Camino Capistrano
San Juan Capistrano, CA 92675
www.RJMdesigngroup.com
(949) 493-2690 fax
(949) 493-2690 phone

RJM DESIGN GROUP

L-2.01

REVISIONS

No.	DATE	SHEET	APPROVAL	DESCRIPTION

AS-BUILT:

REF: DWG. X-XXXX DWG. X-XXXX
DWG. X-XXXX

DESIGNED BY: L.M.
DRAWN BY: M.L.
DESIGN CHECK BY:
DRAFTING CHECK BY:

LICENSED LANDSCAPE ARCHITECT ☆ VINCENT LARREA BOLIO ☆ LICENSE NO. 2162 ☆ STATE OF CALIFORNIA
9/30/24

OCEAN BOULEVARD EROSION AND ENHANCEMENT PROJECT, PHASE 2
EROSION FABRIC PLAN

GRAPHIC SCALE: 0 1 2 3
PAGE
FIELD BOOK

NO. R- 6959
JOB NO. PW8260-13
SHEET 25 OF 44
DRAWING NO. B-4562

LAST SAVED BY: michael
PLOT DATE: Oct 18, 12
SAVED PATH: P:\8881\888-01-Ocean Blvd. Bluffs Phase 2\888-01_CD\888-01-1st-Subm

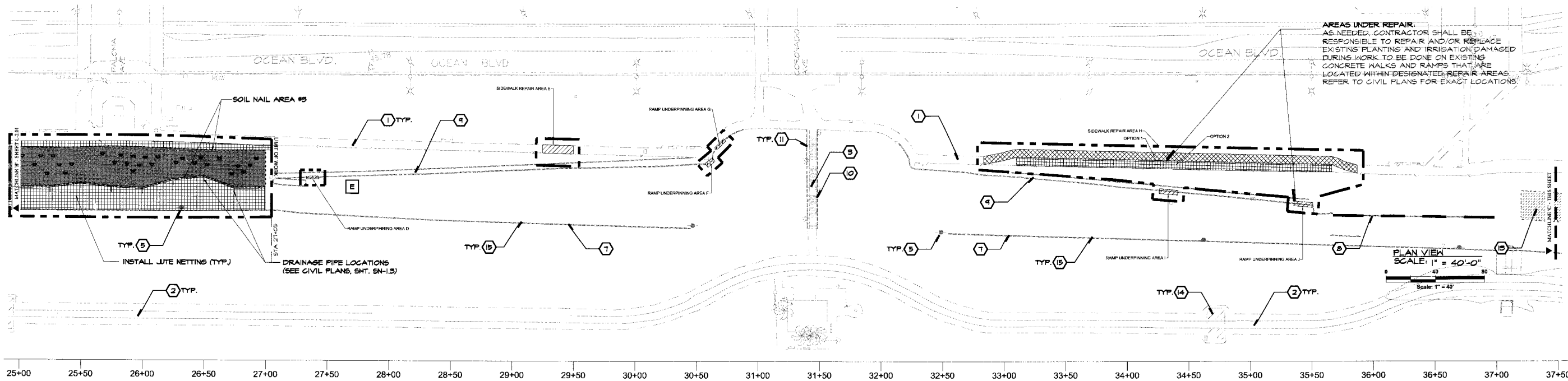

AREAS UNDER REPAIR:
AS NEEDED, CONTRACTOR SHALL BE RESPONSIBLE TO REPAIR AND/OR REPLACE EXISTING PLANTING AND IRRIGATION DAMAGED DURING WORK. TO BE DONE ON EXISTING CONCRETE WALKS AND RAMPS THAT ARE LOCATED WITHIN DESIGNATED REPAIR AREAS. REFER TO CIVIL PLANS FOR EXACT LOCATIONS.

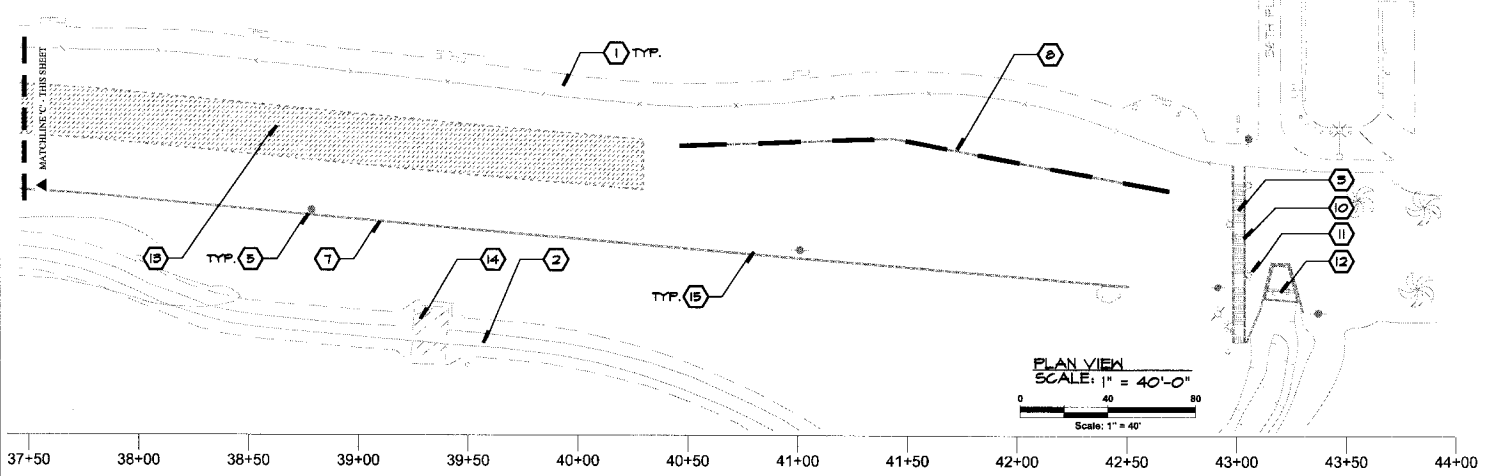

SLOPE LEGEND

- INSTALL JUTE NETTING PER SPECIFICATIONS (SECTION 300-9) AND AS SHOWN PER PLANS.
- CONSTRUCT SOIL NAIL AREA PER PLANS AND PROJECT SPECIFICATIONS
- E — EXISTING VEGETATION PROTECT-IN-PLACE
- EXISTING GABION WALL
- DRAINAGE PIPES (SEE CIVIL PLANS)
- PLANTER POCKET, TYP.

EXISTING CONDITIONS

	DESCRIPTION:	COMMENTS
1	EXISTING SIDEWALK	PROTECT-IN-PLACE
2	EXISTING BIKE PATH	PROTECT-IN-PLACE
3	EXISTING STAIRS	PROTECT-IN-PLACE
4	EXISTING UTILITY BOXES	PROTECT-IN-PLACE
5	EXISTING TELEPHONE POLE	PROTECT-IN-PLACE
6	EXISTING ELECTRICAL TRANSFORMER	PROTECT-IN-PLACE
7	EXISTING RETAINING WALL	PROTECT-IN-PLACE
8	EXISTING GABION WALL	PROTECT-IN-PLACE
9	EXISTING RAMP	PROTECT-IN-PLACE
10	EXISTING HANDRAIL	PROTECT-IN-PLACE
11	EXISTING LIGHT POLE	PROTECT-IN-PLACE
12	EXISTING CONCRETE CULVERT	PROTECT-IN-PLACE
13	EXISTING SOIL NAIL WALL	PROTECT-IN-PLACE
14	EXISTING VEHICULAR ACCESS	PROTECT-IN-PLACE
15	EXISTING 2" IRRIGATION LINE AT BOTTOM OF SLOPE	PROTECT-IN-PLACE

NOTE:
REFER TO SHEETS SN-1 THROUGH SN-4 FOR SOIL NAIL DESIGN.

NOTE:
CONTRACTOR SHALL BE RESPONSIBLE TO REPAIR OR REPLACE ANY DAMAGED EXISTING IMPROVEMENTS DESIGNATED TO BE PROTECTED-IN-PLACE AND/OR IMPROVEMENTS LOCATED OUTSIDE THE LIMITS-OF-WORK. CONTRACTOR SHALL PHOTOGRAPH AND RECORD WITH THE CITY THE CONDITION OF THE SITE PRIOR TO COMMENCEMENT OF THE WORK. THIS INCLUDES PROPOSED STAGING AREAS AND CONSTRUCTION ACCESS ROUTES.

Scale: 1" = 40'

100% DESIGN SUBMITTAL

31591 Camino Capistrano
San Juan Capistrano, CA 92675
www.RJMdesigngroup.com
(949) 493-2690 Fax
(949) 493-2800 phone

RJM DESIGN GROUP

L-2.02

REVISIONS			
No.	DATE	SHEET	DESCRIPTION

APPROVAL

REF: DWG. X-XXXX DWG. X-XXXX
DWG. X-XXXX

AS-BUILT:

DESIGNED BY: L.M.
DRAWN BY: M.L.
DESIGN CHECK BY:
DRAFTING CHECK BY:

LICENSED LANDSCAPE ARCHITECT ☆ LARRY S. MOSER LICENSE NO. 2152 ☆ STATE OF CALIFORNIA
Exp. 08/31/2024

OCEAN BOULEVARD EROSION AND ENHANCEMENT PROJECT, PHASE 2 EROSION FABRIC PLAN

GRAPHIC SCALE: 0 1 2 3
FIELD BOOK
PAGE

NO. R- 6959
JOB NO. PW8260-13
SHEET 26 OF 44
DRAWING NO. B-4562

LAST SAVED BY: michael
PLOT DATE: Oct 18, 12
SAVED PATH: P:\888\888-01-Ocean Blvd. Bluffs Phase 2\888-01_CD\888-01-1st-Subm

GENERAL IRRIGATION NOTES

1. PIPE SIZES SHALL CONFORM TO THOSE SHOWN ON THE DRAWING. NO SUBSTITUTIONS OF SMALLER PIPE SIZES SHALL BE PERMITTED, BUT SUBSTITUTIONS OF LARGER SIZES MAY BE APPROVED. ALL DAMAGED AND REJECTED PIPE SHALL BE REMOVED FROM THE SITE AT THE TIME OF SAID REJECTION.
2. ALL SPRINKLER HEADS SHALL BE SET PERPENDICULAR TO FINISH GRADE UNLESS OTHERWISE SPECIFIED.
3. THE IRRIGATION CONTRACTOR SHALL FLUSH AND ADJUST ALL SPRINKLER HEADS AND VALVES FOR OPTIMUM COVERAGE WITH **NO** OVERSPRAY ONTO WALKS, STREETS, WALLS, ETC.
4. THE IRRIGATION DESIGN IS DIAGRAMMATIC. ALL PIPING, VALVES, ETC., SHOWN WITHIN PAVED AREAS IS FOR DESIGN CLARIFICATION ONLY AND SHALL BE INSTALLED IN PLANTING AREAS WHEREVER POSSIBLE.
5. IT IS THE RESPONSIBILITY OF THE IRRIGATION CONTRACTOR TO BECOME FAMILIAR WITH ALL GRADE DIFFERENCES, LOCATION OF WALLS, RETAINING WALLS, STRUCTURES AND UTILITIES. THE IRRIGATION CONTRACTOR SHALL REPAIR OR REPLACE ALL ITEMS DAMAGED BY THEIR WORK. WORK SHALL BE COORDINATED WITH OTHER CONTRACTORS FOR THE LOCATION AND INSTALLATION OF PIPE SLEEVES THROUGH WALLS, UNDER ROADWAYS, AND PAVING, ETC.
6. THE SPRINKLER SYSTEM DESIGN IS BASED ON A MINIMUM OPERATING PRESSURE AS SHOWN ON THE PLANS. CONTRACTOR SHALL VERIFY WATER PRESSURE PRIOR TO CONSTRUCTION. REPORT THE ACTUAL PRESSURE READING AT THE IRRIGATION POINT OF CONNECTION TO THE CITY'S AUTHORIZED REPRESENTATIVE PRIOR TO START OF WORK.
7. DO NOT WILLFULLY INSTALL THE SPRINKLER SYSTEM AS SHOWN ON THE DRAWINGS WHEN IT IS OBVIOUS IN THE FIELD THAT UNKNOWN OBSTRUCTIONS, GRADE DIFFERENCES, OR DIFFERENCES IN THE AREA EXIST THAT ARE NOT SHOWN ON THE PLANS. SUCH OBSTRUCTIONS OR DIFFERENCES SHOULD BE BROUGHT TO THE ATTENTION OF THE CITY'S AUTHORIZED REPRESENTATIVE. IN THE EVENT THIS NOTIFICATION IS NOT PERFORMED, THE IRRIGATION CONTRACTOR SHALL ASSUME FULL RESPONSIBILITY FOR ANY REVISIONS NECESSARY.
8. ALL SPRINKLER EQUIPMENT NOT DETAILED OR SPECIFIED SHALL BE INSTALLED AS PER MANUFACTURER'S RECOMMENDATIONS AND SPECIFICATIONS.
9. THE IRRIGATION CONTRACTOR SHALL INSTALL ANTI DRAIN VALVES ON ALL HEADS IN AREAS WHERE FINISH GRADE EXCEEDS 4:1, WHERE POST VALVE SHUT-OFF DRAINING OF THE IRRIGATION SYSTEM OCCURS OR AS DIRECTED BY THE CITY'S AUTHORIZED REPRESENTATIVE.
10. WHERE THERE IS NO IRRIGATION CALLED OUT AND PLANTING / HYDROSEED MIX IS TO BE APPLIED, CONTRACTOR SHALL WATER PLANTINGS UNTIL PLANT ESTABLISHMENT.

11. CONTRACTOR IS RESPONSIBLE FOR ANY AND ALL PERMITS ASSOCIATED WITH USING RECYCLED WATER IN THE IRRIGATION SYSTEM.
12. APPROPRIATE SETBACKS FROM POTABLE WATER LINES MUST BE FOLLOWED PER CITY REQUIREMENTS.
13. ALL IRRIGATION EQUIPMENT (VALVE BOXES, SPRAY HEADS,ETC.) MUST BE THE DESIGNATED PURPLE COLOR TO INDICATE THAT NON-POTABLE WATER IS IN USE.
14. NO OVERSPRAY IS PERMITTED ON WALKS, SEATING AREAS, BENCHES AND/OR OTHER SITE AMENITIES USED BY THE PUBLIC.
15. RECYCLED WATER IS USED FOR THE IRRIGATION SYSTEM. FOLLOW LOCAL CODE AND PERMIT REQUIREMENTS.
16. PROVIDE A SIGN STATING "RECYCLED WATER IS USED FOR THE IRRIGATION SYSTEM."

ROTOR LEGEND - RECYCLED WATER

SYMBOL	DESCRIPTION	MANUFACTURER PART NO.	NOZZLE	PATTERN (DEGREE)	FLOW (GPM)	RADIUS (FEET)	PRES (PSI)	PRECIP (IN/HR)
20	ROTOR ON RISER	RAINBIRD 5000-S PL FC R NP	2.0 LA	FULL	2.02	24-32'	45	0.19
10	ROTOR ON RISER	RAINBIRD 5000-S PL PC R NP	1.0 LA	HALF	1.01	24-32'	45	0.23
10	ROTOR ON RISER	RAINBIRD 5000-S PL PC R NP	1.0 LA	QRTR	1.01	24-32'	45	0.46
REFER TO DETAIL 3.00 FOR INSTALLATION OF ROTOR ON RISER								
M1	ROTATOR ON RISER	HUNTER PROS-00 - PRS 40	HUNTER MP-1000	360	0.75	8-14'	40	0.45
M1	ROTATOR ON RISER	HUNTER PROS-00 - PRS 40	HUNTER MP-1000	90-210	0.37	8-14'	40	0.45
M1	ROTATOR ON RISER	HUNTER PROS-00 - PRS 40	HUNTER MP-1000	90-210	0.19	8-14'	40	0.45
M2	ROTATOR ON RISER	HUNTER PROS-00 - PRS 40	HUNTER MP-2000	360	1.47	14-20'	40	0.45
M2	ROTATOR ON RISER	HUNTER PROS-00 - PRS 40	HUNTER MP-2000	90-210	0.74	14-20'	40	0.45
M2	ROTATOR ON RISER	HUNTER PROS-00 - PRS 40	HUNTER MP-2000	90-210	0.40	14-20'	40	0.45
REFER TO DETAIL 3.01 FOR INSTALLATION OF ROTATOR ON RISER								

IRRIGATION ABBREVIATION LEGEND

B.P.	BOOSTER PUMP
D.I.	DUCTILE IRON
D.W.	DOMESTIC WATER
F.S.	FLOW SENSOR
G.P.H.	GALLONS PER HOUR
G.P.M.	GALLONS PER MINUTE
HR.	HOUR
ID.	IDENTIFICATION
IN.	INCH / INCHES
O.C.	ON CENTER
P.O.C.	POINT OF CONNECTION
P.S.I.	POUNDS PER SQUARE INCH
P.V.C.	POLYVINYL CHLORIDE
R.M.	RECYCLED WATER METER
R.W.	RECYCLED WATER
Sch.	SCHEDULE
SQ.	SQUARE
T.O.E.	THREAD ONE END
Typ.	TYPICAL
U.V.R.	ULTRA-VIOLET RESISTANT

IRRIGATION EQUIPMENT LEGEND

SYMBOL	ITEM - MANUFACTURER - MODEL NUMBER - DESCRIPTION		DETAIL REFERENCE
RM	WATER METER	EXISTING 4" RECYCLED WATER METER PROVIDING SERVICE TO BLUFF PARK	
	GATE VALVE	EXISTING GATE VALVE - LINE SIZE	
BP	BOOSTER PUMP	EXISTING BOOSTER PUMP ASSEMBLY	
	BASKET STRAINER	EXISTING STAINLESS STEEL BASKET STRAINER	
	MASTER VALVE	EXISTING NORMALLY CLOSED MASTER VALVE - 2"	
	FLOW SENSOR	EXISTING FLOW SENSOR	
	QUICK COUPLER	EXISTING 1" QUICK COUPLER WITH PURPLE VINYL LOCKING COVER	
	CONTROL VALVE	EXISTING AUTOMATIC CONTROL VALVE REFER TO PLAN FOR SIZES	
	CONTROL VALVE	EXISTING 1" AUTOMATIC DRIP CONTROL VALVE	
	CONTROL VALVE DRIP	RAINBIRD PESB-R 1" AUTOMATIC CONTROL VALVE WITH PURPLE FLOW CONTROL. INCLUDE RAINBIRD QK-CHK BASKET STRAINER.	1.04, SHEET 3.02
S	RW ID SIGN	EXISTING RECYCLED WATER WARNING ID SIGN	
	CONTROLLER A AND B	EXISTING CALSENSE 48 STATION CENTRAL CAPABLE SATELLITES IN A DOUBLE WIDE TOP MOUNTED STRONGBOX ASSEMBLY	
N	IN-LINE CHECK VALVE	KBI KSC SERIES LINE SIZE SWING CHECK FOR UPHILL FLOW DIRECTION KBI KC SERIES LINE SIZE SPRING CHECK FOR DOWNHILL FLOW DIRECTION	
	PRESSURE MAINLINE	EXISTING PURPLE CLASS 315 PRESSURE MAINLINE FOR PIPE 2" THROUGH 3" PURPLE SCH 40 PRESSURE MAINLINE FOR PIPE 1-1/2" AND SMALLER	2.02, SHEET 3.02
	ABOVE GRADE LATERAL LINE	SCH 40 UVR SOLVENT WELD PVC - 3/4" MINIMUM WITH UVR SCHEDULE 40 PVC FITTINGS. PROVIDE REBAR SUPPORT STAKES AT 10' O.C. PURPLE RECYCLED WARNING STICKERS 5' O.C.	2.04, SHEET 3.02
	SOIL NAIL FACING LATERAL AND DRIP EMITTER	SALCO FLEXIBLE SOLVENT WELD, 1/2" SCHEDULE 40 PVC NON-PRESSURE LATERAL LINE. PIPE TO BE EXTEND FROM ON GRADE LATERAL ABOVE SOIL NAIL FACING, BEHIND WALL TO PLANTER POCKET. THERE SHALL BE NO FITTINGS FROM CONNECTION POINT TO POCKET. INSTALL 2.0 GPH EMITTER PER DETAIL. COORDINATE WITH SOIL FACING CONTRACTOR.	3.03, SHEET 3.03
	DRIP LATERAL	SCHEDULE 40 UVR PVC NON-PRESSURE LATERAL PIPING ON GRADE. SIZE PER PLAN. STAKE PIPE 6' O.C. WITH 36" #4 REBAR STAKE. INCLUDE GPH DRIP IRRIGATION 1/2" FLEX RISER FROM ON GRADE UVR PVC LATERAL TO EACH SHRUB ALONG SHRUB ROW ABOVE SOIL NAIL AREA. INSTALL ONE (1) 2.0 GPH BOWSMITH SL200 SERIES EMITTER TO EACH SHRUB PER DETAIL 3.04	3.04, SHEET 3.03
NOT SHOWN	VALVE BOX	RECTANGULAR BROOKS 1100 - 14" X 19" CIRCULAR BROOKS 1101 - 10" ROUND ALL BOXES TO BE PURPLE AND INCLUDE PURPLE BOLT DOWN LOCKING LIDS.	2.07, SHEET 3.02
NOT SHOWN	WIRE CONNECTORS	3M DBY OR 3M DBR WATERPROOF DIRECT BURY CONNECTORS	2.01, SHEET 3.02

C1 / 2" / 22
- DENOTES STATION NUMBER
- DENOTES VALVE FLOW (GPM)
- DENOTES VALVE SIZE

NOTE: ALL ABOVE GRADE PIPING SHALL BE INSTALLED PER DETAIL 2.04, SHEET 3.01 AND ABOVE SOIL EROSION FABRIC.

MIN. OPERATING WATER PRESSURE = 69 PSI, PHASE 2

100% DESIGN SUBMITTAL

31591 Camino Capistrano
San Juan Capistrano, CA 92675
www.RJMdesigngroup.com
(949) 493-2690 fax
(949) 493-2600 phone

RJM DESIGN GROUP

L-3.01

REVISIONS

No.	DATE	SHEET	APPROVAL	DESCRIPTION

AS-BUILT:

REF. DWG. X-XXXX DWG. X-XXXX
DWG. X-XXXX

DESIGNED BY: S.H.
DRAWN BY: S.H.
DESIGN CHECK BY:
DRAFTING CHECK BY:

LICENSED LANDSCAPE ARCHITECT ☆ 2152 ☆ STATE OF CALIFORNIA
LARRY O'BRIEN
Signature
Date 06/30/22

OCEAN BOULEVARD EROSION AND ENHANCEMENT PROJECT, PHASE 2
IRRIGATION LEGENDS

GRAPHIC SCALE 0 1 2 3

FIELD BOOK | PAGE

NO. R- 6959

JOB NO. PW8260-13

SHEET 27 OF 44

DRAWING NO. B-4562

NOTE: ALL ABOVE GRADE PIPING SHALL BE INSTALLED ABOVE SOIL EROSION FABRIC.

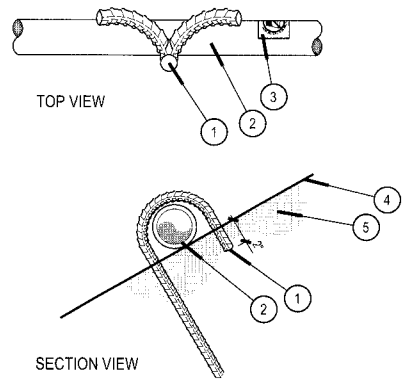

1. #4 REBAR STABILIZER 36" DEEP, 6' O.C. FOR LATERALS
2. PIPE ON GRADE. REFER TO LEGEND FOR TYPES
3. RECYCLED WARNING STICKER 5' ON CENTER
4. FINISH GRADE ON SLOPE / SOIL EROSION FABRIC
5. SUBGRADE

2.04 - RW PIPE ON GRADE

NO SCALE

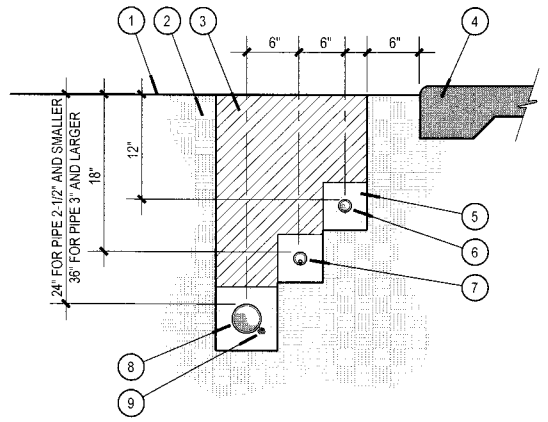

1. FINISH GRADE
2. SUBGRADE
3. BACKFILL - REFER TO SPECIFICATIONS
4. HARDSCAPE OR STRUCTURE
5. DEBRIS AND ROCK FREE BACKFILL (OR SAND) MINIMUM 2" ABOVE AND BELOW PIPING.
6. LATERAL
7. COMMUNICATION CABLE IN CONDUIT (IF APPLICABLE)
8. MAINLINE
9. LOW VOLTAGE CONTROL WIRE - BUNDLE WIRES AND ATTACH TO PIPE AT 10' INTERVALS - PROVIDE 20" EXPANSION LOOP AT CHANGE IN DIRECTIONS

2.02 - TRENCHING

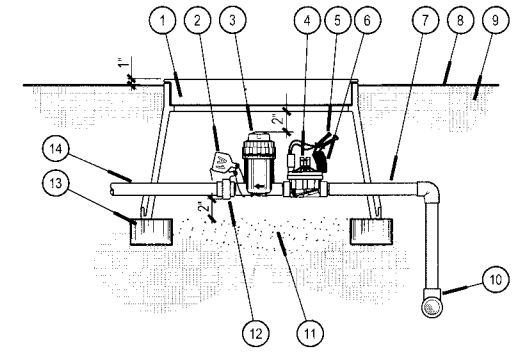

1. RECTANGULAR VALVE BOX - LABEL PER BRANDING DETAIL
2. T CHRISTY YELLOW STATION ID TAG AND A SERPERATE WATER ID TAG AS REQUIRED
3. FILTER WITH PRESSURE REGULATOR REFER TO LEGEND
4. REMOTE CONTROL VALVE - REFER TO LEGEND
5. WIRE CONNECTOR KIT 3M DBY WATERPROOF
6. VALVE WIRES - PROVIDE 24" MININIMUM EXPANSION COIL FOR EACH
7. SCHEDULE 80 PVC NIPPLE THREAD ONE END - MINIMUM 6" LENGTH TO EXTEND INTO VALVE BOX
8. FINISH GRADE
9. SUBGRADE
10. PRESSURE MAINLINE TEE AND PIPING - LENGTH AS REQUIRED
11. GRAVEL 3/4" CRUSHED - 12" DEEP
12. UNION SCHEDULE 80 PVC S X T
13. COMMON BRICK SUPPORTS - FOUR REQUIRED
14. PVC LATERAL LINE

1.04 - REMOTE CONTROL VALVE DRIP

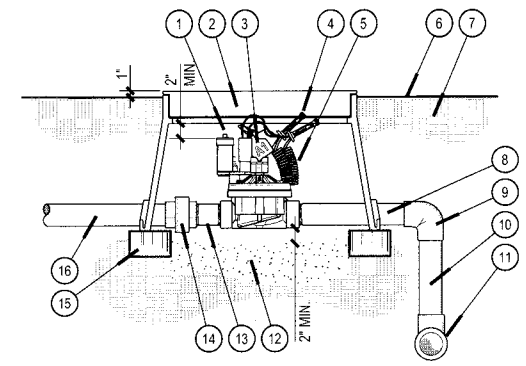

1. AUTOMATIC CONTROL VALVE - SEE LEGEND FOR TYPE
2. RECTANGULAR VALVE BOX - LABEL PER BRANDING DETAIL
3. T CHRISTY YELLOW STATION ID TAG AND A SERPERATE WATER ID TAG AS REQUIRED - ATTACH TO WIRES WITH ZIP TIE
4. 3M DBY WATERPROOF WIRE CONNECTOR
5. VALVE WIRE AND COMMON - PROVIDE 24" MININIMUM EXPANSION COIL
6. FINISH GRADE
7. SUBGRADE
8. SCHEDULE 80 PVC THREAD ONE END NIPPLE - MINIMUM 6" LENGTH TO EXTEND PAST VALVE BOX
9. MAINLINE SLIP ELL
10. MAINLINE PIPING - LENGTH AS REQUIRED
11. MAINLINE TEE OR ELL
12. 3/4" CRUSHED GRAVEL - 12" DEEP
13. SCHEDULE 80 PVC NIPPLE - 3" LENGTH
14. SCHEDULE 80 PVC S X T UNION
15. BRICK SUPPORTS - FOUR REQUIRED
16. PVC LATERAL LINE

1.03 - REMOTE CONTROL VALVE

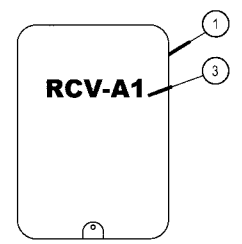

ITEMS:	CONTROLLER I.D.:	BRANDING:
ISOLATION VALVE	A	BV - A
BASKET STRAINER	A	BS - A
MASTER VALVE	A	MV - A
FLOW SENSOR	A	FS - A
CONTROL VALVE	A	RCV - A

RCV - A1: REMOTE CONTROL VALVE CONTROLLER I.D. / STATION NUMBER

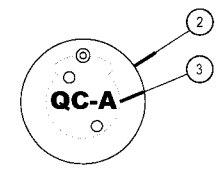

ITEMS:	CONTROLLER I.D.:	BRANDING:
FLUSH VALVE	A	FV
SPARE WIRE	A	SW - A
AIR RELIEF VALVE	A	AR - A
QUICK COUPLER	A	QC - A

QC - A: QUICK COUPLER / CONTROLLER I.D.

1. RECTANGULAR VALVE BOX
2. ROUND VALVE BOX
3. 2 INCH IDENTIFICATION BRAND - REFER TO VALVE DETAILS FOR REQUIREMENTS

2.07 - VALVE BOX BRANDING

REVISIONS			
No.	DATE	SHEET	APPROVAL

DESCRIPTION

REF. DWG. X-XXXX DWG. X-XXXX
DWG. X-XXXX

AS-BUILT:

DESIGNED BY: S.H.
DRAWN BY: S.H.
DESIGN CHECK BY:
DRAFTING CHECK BY:

LICENSED LANDSCAPE ARCHITECT LICENSE NO. 2152 LARRY S. MILLER STATE OF CALIFORNIA
EXPIRES 08/31/2013
10/08/2012

OCEAN BOULEVARD EROSION AND ENHANCEMENT PROJECT, PHASE 2 IRRIGATION DETAILS

GRAPHIC SCALE 0 1 2 3

PAGE

FIELD BOOK

NO. R- 6959

JOB NO. PW8260-13

SHEET 28 OF 44

DRAWING NO. B-4562

100% DESIGN SUBMITTAL

31591 Camino Capistrano
San Juan Capistrano, CA 92675
www.RJMdesigngroup.com
(949) 493-2690 tel
(949) 493-2690 plants

RJM DESIGN GROUP

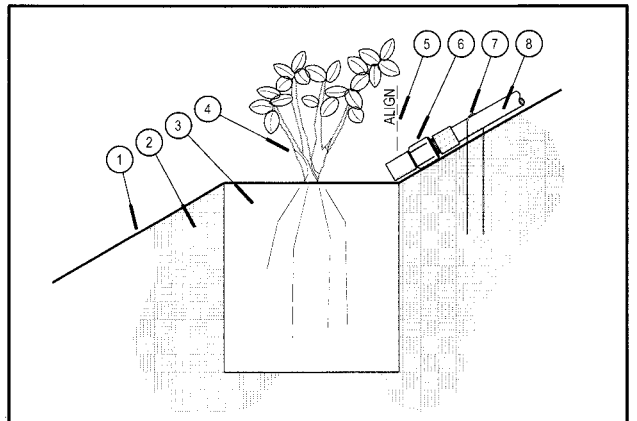

1. FINISH GRADE
2. SUBGRADE
3. ROOTBALL
4. PLANT MATERIAL
5. ALIGN EMITTER WITH EDGE OF PLANT PIT ON SLOPE AREAS
6. BOWSMITH SL200 2.0 GPH EMITTER
7. 12" LONG TUBING STAKE PER EMITTER
8. GPH PRODUCTS IH SERIES FLEX RISER - LENGTH AS REQUIRED (INCLUDES MALE ADAPTERS)

3.02 - DRIP ON SLOPE SHRUB

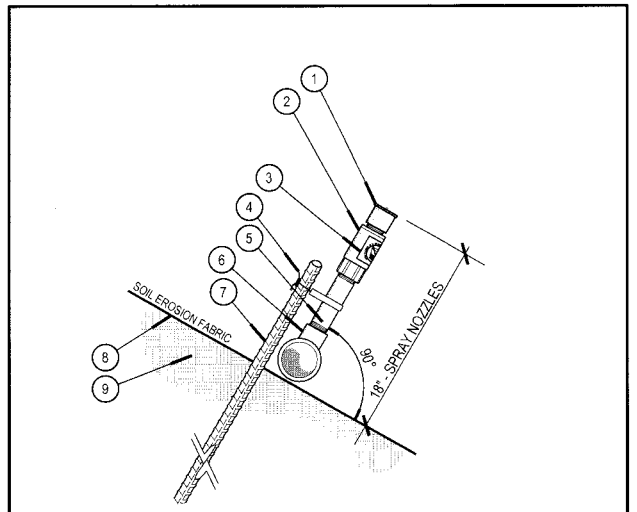

1. SPRAY HEAD - REFER TO LEGEND
2. NELSON 1/2" FNPT X 1/2" MNPT 40 PSI REGULATOR / DRAIN CHECK MODEL NO. 11150-040
3. WATER IDENTIFICATION TAG - AS REQUIRED
4. VIT PRODUCTS ST-9 SPRINKLER TWIST TIE - INSTALL WITH TWIST TIE TOOL
5. 1/2" SCHEDULE 80 NIPPLE - LENGTH AS REQUIRED
6. SCHEDULE 40 UVR SST TEE
7. #4 REBAR STABLIZER -BURY TO 36" DEPTH
8. INSTALL PIPING ABOVE SOIL EROSION FABRIC
9. SUBGRADE

3.01 - ROTATOR ON GRADE

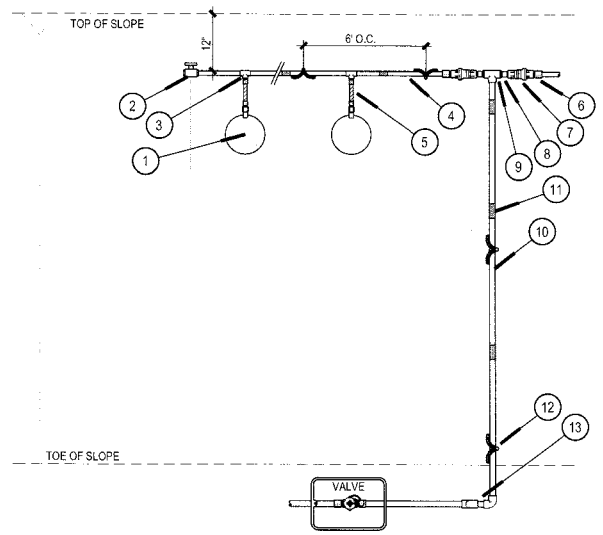

1. SHRUB LOCATION, REFER TO SHRUB DRIP IRRIGATION DETAIL 3.02, SHEET 3.03
2. 3/4" PVC BALL VALVE FOR FLUSHING SYSTEM
3. SCHEDULE 40 UVR PVC REDUCING TEE
4. SCHEDULE 40 UVR PVC LATERAL, 3/4" MINIMUM
5. GPH GIH-12 SERIES FLEX RISERS, MIN 12" LENGTH, LONGER AS REQUIRED.
6. SCHEDULE 40 UVR PVC 3/4" MALE ADAPTER
7. SENNINGER 40 PSI 3/4" PRESSURE REGULATOR
8. SCHEDULE 80 PVC 3/4" X 2" NIPPLE
9. SCHEDULE 40 PVC 3/4" X INLET X 3/4" TxSxT TEE, INLET SIZE AS SHOWN ON PLAN
10. SCHEDULE 40 PVC LATERAL LINE ON GRADE, SIZE PER PLAN
11. RECYCLED WARNING STICKERS 5' ON CENTER ON ALL UVR PVC ON GRADE
12. #4 REBAR STAKE, 36" LENGTH, LOCATE 6' ON CENTER AND AT ALL CHANGES IN DIRECTION
13. ADAPT LATERAL FROM BELOW GRADE TO ABOVE GRADE WITH DUAL ELL SLIP JOINT

3.04 - DRIP IRRIGATION ON SLOPE DETAIL

NO SCALE

NOTES:

- REFER TO DETAIL 5, SHEET 17 FOR SOIL NAIL WALL CONSTRUCTION DETAILS.
- AMEND SOIL PER TECHNICAL SPECIFICATIONS

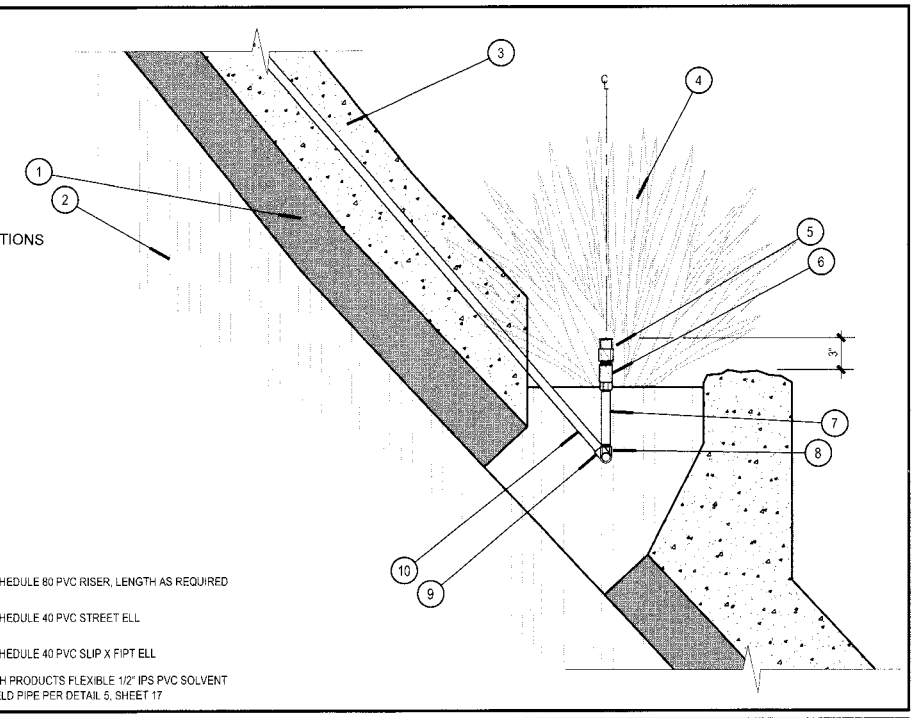

1. PRIMARY LAYER OF SOIL NAIL FACING
2. NATIVE SOIL
3. SCULPTED LAYER OF SOIL NAIL FACING
4. PLANT LOCATION
5. BOWSMITH SL200 2.0 GPH THREADED EMITTER
6. NELSON 1/2" FNPT X MNPT 30 PSI PRESSURE REGULATOR / CHECK VALVE MODEL NO. 11150-030
7. SCHEDULE 80 PVC RISER, LENGTH AS REQUIRED
8. SCHEDULE 40 PVC STREET ELL
9. SCHEDULE 40 PVC SLIP X FIPT ELL
10. GPH PRODUCTS FLEXIBLE 1/2" IPS PVC SOLVENT WELD PIPE PER DETAIL 5, SHEET 17

3.03 - SOIL NAIL AREA PLANTER POCKET IRRIGATION

100% DESIGN SUBMITTAL

31591 Camino Capistrano
San Juan Capistrano, CA 92675
www.RJMdesigngroup.com
(949) 493-2690 fax
(949) 493-2600 phone

RJM DESIGN GROUP

L-3.03

REVISIONS				
No.	DATE	SHEET	APPROVAL	DESCRIPTION

DESIGNED BY: S.H.
DRAWN BY: S.H.
DESIGN CHECK BY:
DRAFTING CHECK BY:
AS-BUILT:
REF. DWG. X-XXXX DWG. X-XXXX
DWG. X-XXXX

LICENSED LANDSCAPE ARCHITECT ☆ STATE OF CALIFORNIA ☆ LARRY D. MOURT LICENSE No. 2562 Signature 10/18/2012 Date

OCEAN BOULEVARD EROSION AND ENHANCEMENT PROJECT, PHASE 2
IRRIGATION DETAILS

FIELD BOOK | PAGE | GRAPHIC SCALE 0 1 2 3

NO. R- 6959
JOB NO. PW8260-13
SHEET 29 OF 44
DRAWING NO. B-4562

IRRIGATION OFFSET NOTE

IRRIGATION HEADS ARE TO BE PLACED 4'-6" OFFSET FROM RETAINING WALL AT TOE OF SLOPE, 6' FROM LOWER SIDE OF EXISTING GABION WALLS, AND 10' FROM UPPER SIDE OF GABION WALLS. DASHED LINE DELINEATES OFFSET SETBACK LINE.

CONTRACTOR NOTE

CONTRACTOR SHALL BE RESPONSIBLE TO REPAIR OR REPLACE ANY DAMAGED EXISTING IMPROVEMENTS DESIGNATED TO BE PROTECTED-IN-PLACE AND/OR IMPROVEMENTS LOCATED OUTSIDE THE LIMITS-OF-WORK. CONTRACTOR SHALL PHOTOGRAPH AND RECORD WITH THE CITY THE CONDITION OF THE SITE PRIOR TO COMMENCEMENT OF THE WORK. THIS INCLUDES PROPOSED STAGING AREAS AND CONSTRUCTION ACCESS ROUTES.

LATERAL PIPE SIZING LEGEND

NO 1/2" PIPE PERMITTED

- 3/4" MINIMUM
- 1"
- 1-1/4"
- 1-1/2"
- 2"

REFER TO LEGEND ON SHEET L-3.01 FOR TYPE

ROTOR LEGEND - RECYCLED WATER

SYMBOL	DESCRIPTION	MANUFACTURER PART NO.	NOZZLE	PATTERN (DEGREE)	FLOW (GPM)	RADIUS (FEET)	PRES (PSI)	PRECIP (IN/HR)
2.0	ROTOR ON RISER	RAINBIRD 5000-S PL FC R NP	2.0 LA	FULL	2.02	24-32'	45	0.19
1.0	ROTOR ON RISER	RAINBIRD 5000-S PL PC R NP	1.0 LA	HALF	1.01	24-32'	45	0.23
(1.0)	ROTOR ON RISER	RAINBIRD 5000-S PL PC R NP	1.0 LA	QRTR	1.01	24-32'	45	0.46
REFER TO DETAIL 3.00 FOR INSTALLATION OF ROTOR ON RISER								
M1	ROTATOR ON RISER	HUNTER PROS-00 - PRS 40	HUNTER MP-1000	360	0.75	8-14'	40	0.45
(M1)	ROTATOR ON RISER	HUNTER PROS-00 - PRS 40	HUNTER MP-1000	90-210	0.37	8-14'	40	0.45
(M1)	ROTATOR ON RISER	HUNTER PROS-00 - PRS 40	HUNTER MP-1000	90-210	0.19	8-14'	40	0.45
M2	ROTATOR ON RISER	HUNTER PROS-00 - PRS 40	HUNTER MP-2000	360	1.47	14-20'	40	0.45
(M2)	ROTATOR ON RISER	HUNTER PROS-00 - PRS 40	HUNTER MP-2000	90-210	0.74	14-20'	40	0.45
(M2)	ROTATOR ON RISER	HUNTER PROS-00 - PRS 40	HUNTER MP-2000	90-210	0.40	14-20'	40	0.45
REFER TO DETAIL 3.01 FOR INSTALLATION OF ROTATOR ON RISER								

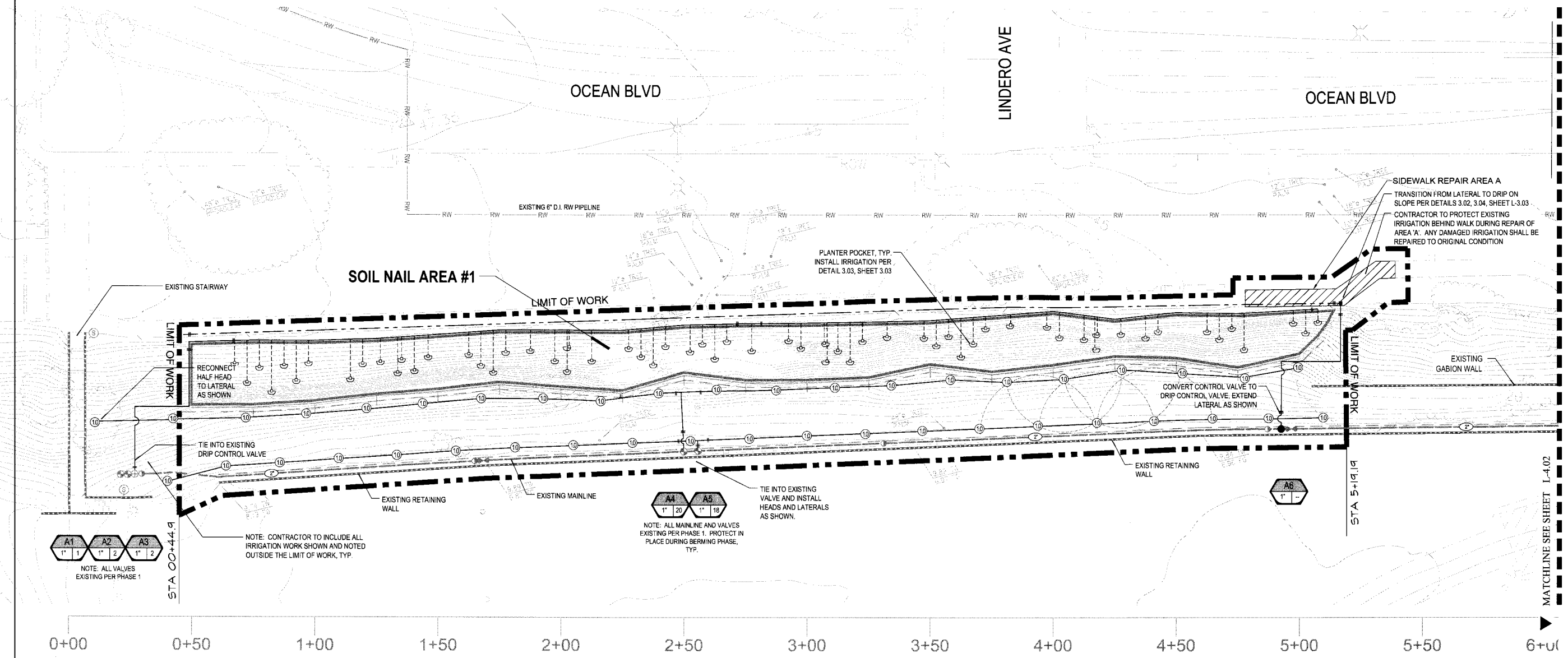

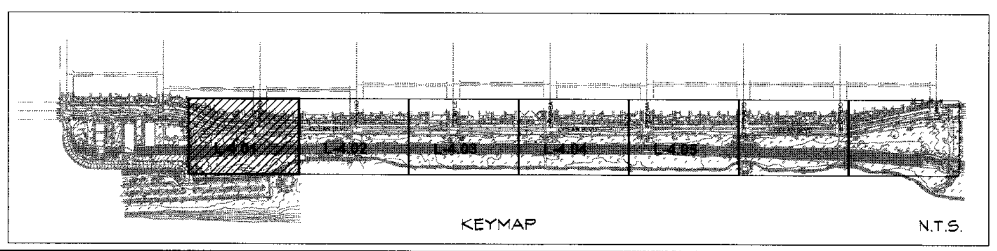

0 20 40
S e: 1" 20

100% DESIGN SUBMITTAL

31591 Camino Capistrano
San Juan Capistrano, CA 92675
www.RJMdesigngroup.com
(949) 493-2690 Tel
(949) 493-2690 Fax

RJM DESIGN GROUP

L-4.01

REVISIONS

No.	DATE	SHEET	APPROVAL	DESCRIPTION
AS-BUILT:			REF. DWG. X-XXXX DWG. X-XXXX	DWG. X-XXXX

DESIGNED BY: S.H.
DRAWN BY: S.H.
DESIGN CHECK BY:
DRAFTING CHECK BY:

LANDSCAPE ARCHITECT ★ LICENSED ★ LARRY L. BOOTH ★ No. 2192 ★ STATE OF CALIFORNIA

OCEAN BOULEVARD EROSION AND ENHANCEMENT PROJECT, PHASE 2
IRRIGATION PLAN

GRAPHIC SCALE 0 1 2 3

FIELD BOOK
PAGE

NO. R- 6959

JOB NO. PW6260-13

SHEET 30 OF 44

DRAWING NO. B-4562

CONTRACTOR NOTE

CONTRACTOR SHALL BE RESPONSIBLE TO REPAIR OR REPLACE ANY DAMAGED EXISTING IMPROVEMENTS DESIGNATED TO BE PROTECTED-IN-PLACE AND/OR IMPROVEMENTS LOCATED OUTSIDE THE LIMITS-OF-WORK. CONTRACTOR SHALL PHOTOGRAPH AND RECORD WITH THE CITY THE CONDITION OF THE SITE PRIOR TO COMMENCEMENT OF THE WORK. THIS INCLUDES PROPOSED STAGING AREAS AND CONSTRUCTION ACCESS ROUTES.

SHEET INSERTED FOR
REFERENCE ONLY

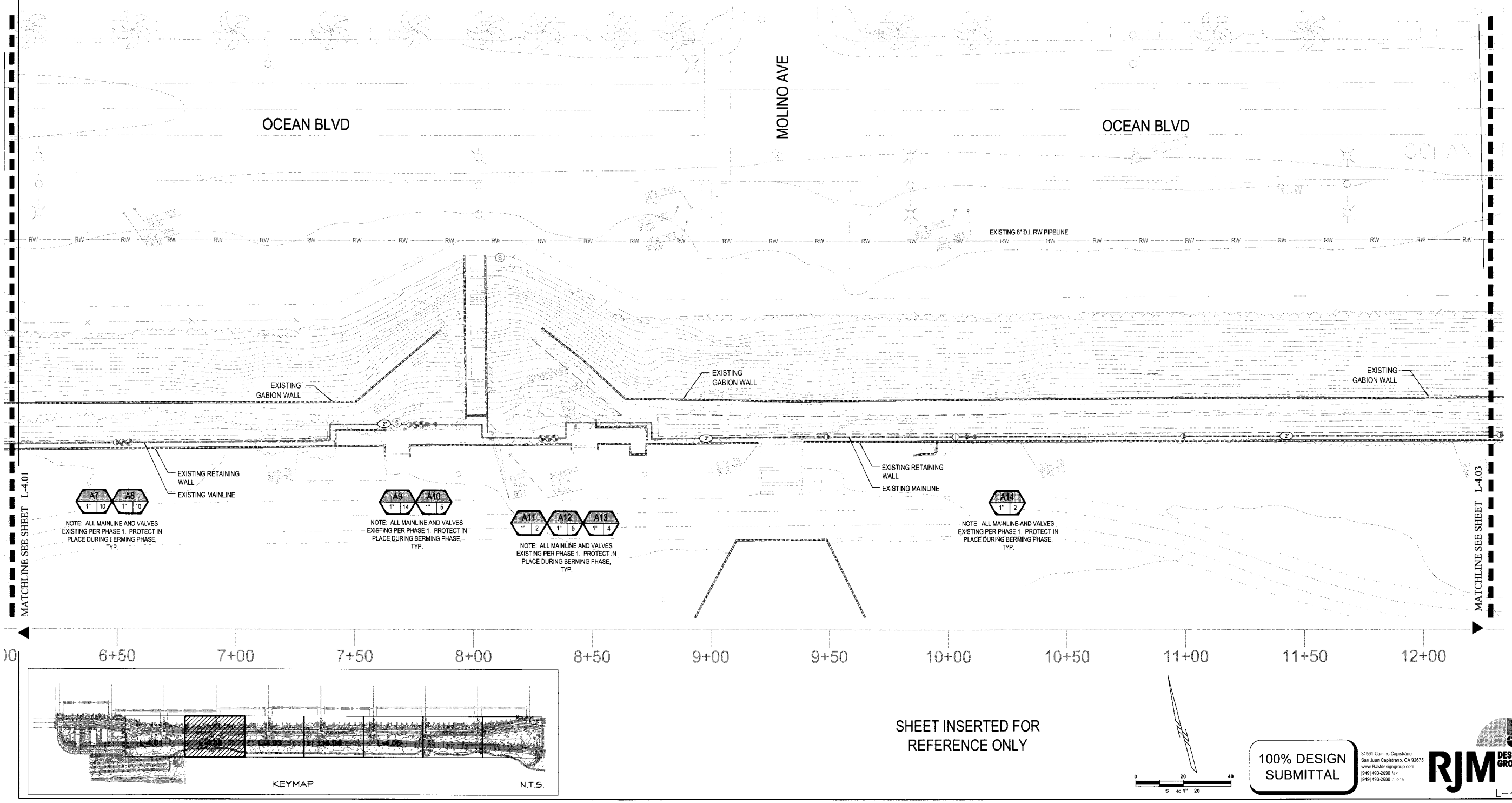

SHEET INSERTED FOR
REFERENCE ONLY

0 20 40
SCALE: 1" = 20'

100% DESIGN SUBMITTAL

31591 Camino Capistrano
San Juan Capistrano, CA 92675
www.RJMdesigngroup.com
(949) 493-2696 fax
(949) 493-2500 phone

RJM DESIGN GROUP

L-4.02

REVISIONS				
No.	DATE	SHEET	APPROVAL	DESCRIPTION
AS-BUILT:				REF. DWG. X-XXXX DWG. X-XXXX DWG. X-XXXX

DESIGNED BY: S.H.
DRAWN BY: S.H.
DESIGN CHECK BY:
DRAFTING CHECK BY:

LANDSCAPE ARCHITECT ☆ LICENSED ☆ STATE OF CALIFORNIA
LARRY BRANDT No. 2162
EXPIRATION DATE 08/31/2022

OCEAN BOULEVARD EROSION AND ENHANCEMENT PROJECT, PHASE 2
IRRIGATION PLAN

GRAPHIC SCALE 0 1 2 3
FIELD BOOK
PAGE

NO. R- 6959
JOB NO. PW8260-13
SHEET 31 OF 44
DRAWING NO. B-4562

IRRIGATION OFFSET NOTE

IRRIGATION HEADS ARE TO BE PLACED 4'-6" OFFSET FROM RETAINING WALL AT TOE OF SLOPE, 6' FROM LOWER SIDE OF EXISTING GABION WALLS, AND 10' FROM UPPER SIDE OF GABION WALLS. DASHED LINE DELINEATES OFFSET SETBACK LINE.

CONTRACTOR NOTE

CONTRACTOR SHALL BE RESPONSIBLE TO REPAIR OR REPLACE ANY DAMAGED EXISTING IMPROVEMENTS DESIGNATED TO BE PROTECTED-IN-PLACE AND/OR IMPROVEMENTS LOCATED OUTSIDE THE LIMITS-OF-WORK. CONTRACTOR SHALL PHOTOGRAPH AND RECORD WITH THE CITY THE CONDITION OF THE SITE PRIOR TO COMMENCEMENT OF THE WORK. THIS INCLUDES PROPOSED STAGING AREAS AND CONSTRUCTION ACCESS ROUTES.

LATERAL PIPE SIZING LEGEND

NO 1/2" PIPE PERMITTED

- 3/4" MINIMUM
- 1"
- 1-1/4"
- 1-1/2"
- 2"

REFER TO LEGEND ON SHEET L-3.01 FOR TYPE

ROTOR LEGEND - RECYCLED WATER

SYMBOL	DESCRIPTION	MANUFACTURER PART NO.	NOZZLE	PATTERN (DEGREE)	FLOW (GPM)	RADIUS (FEET)	PRES (PSI)	PRECIP (IN/HR)
2.0	ROTOR ON RISER	RAINBIRD 5000-S PL FC R NP	2.0 LA	FULL	2.02	24-32'	45	0.19
(10)	ROTOR ON RISER	RAINBIRD 5000-S PL PC R NP	1.0 LA	HALF	1.01	24-32'	45	0.23
(10)	ROTOR ON RISER	RAINBIRD 5000-S PL PC R NP	1.0 LA	QRTR	1.01	24-32'	45	0.46
REFER TO DETAIL 3.00 FOR INSTALLATION OF ROTOR ON RISER								
M1	ROTATOR ON RISER	HUNTER PROS-00 - PRS 40	HUNTER MP-1000	360	0.75	8-14'	40	0.45
(M1)	ROTATOR ON RISER	HUNTER PROS-00 - PRS 40	HUNTER MP-1000	90-210	0.37	8-14'	40	0.45
(M1)	ROTATOR ON RISER	HUNTER PROS-00 - PRS 40	HUNTER MP-1000	90-210	0.19	8-14'	40	0.45
M2	ROTATOR ON RISER	HUNTER PROS-00 - PRS 40	HUNTER MP-2000	360	1.47	14-20'	40	0.45
(M2)	ROTATOR ON RISER	HUNTER PROS-00 - PRS 40	HUNTER MP-2000	90-210	0.74	14-20'	40	0.45
(M2)	ROTATOR ON RISER	HUNTER PROS-00 - PRS 40	HUNTER MP-2000	90-210	0.40	14-20'	40	0.45
REFER TO DETAIL 3.01 FOR INSTALLATION OF ROTATOR ON RISER								

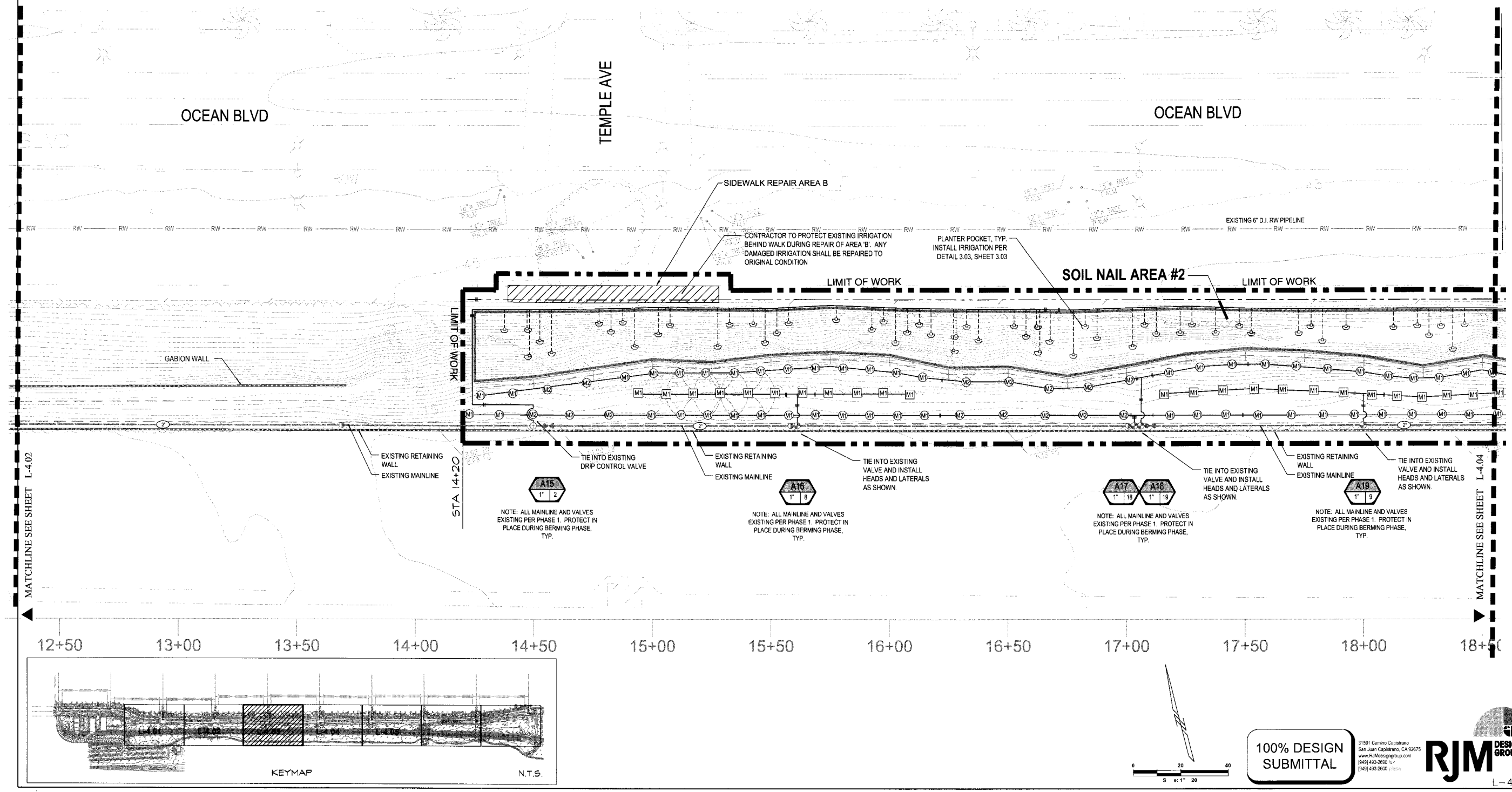

100% DESIGN SUBMITTAL

31591 Camino Capistrano
San Juan Capistrano, CA 92675
www.RJMdesigngroup.com
(949) 493-2650 fax
(949) 493-2600 phone

RJM DESIGN GROUP

L-4.03

REVISIONS

No.	DATE	SHEET	APPROVAL	DESCRIPTION

AS-BUILT:

REF. DWG. X-XXXX DWG. X-XXXX
DWG. X-XXXX

DESIGNED BY: S.H.
DRAWN BY: S.H.
DESIGN CHECK BY:
DRAFTING CHECK BY:

LICENSED LANDSCAPE ARCHITECT ★ REGISTERED PROFESSIONAL LANDSCAPE ARCHITECT NO. 2162 ★ STATE OF CALIFORNIA
Signature
Date
Print Name

OCEAN BOULEVARD EROSION AND ENHANCEMENT PROJECT, PHASE 2
IRRIGATION PLAN

GRAPHIC SCALE 0 1 2 3

PAGE

FIELD BOOK

NO. R- 6959

JOB NO. PW8260-13

SHEET 32 OF 44

DRAWING NO. B-4562

IRRIGATION OFFSET NOTE

IRRIGATION HEADS ARE TO BE PLACED 4'-6" OFFSET FROM RETAINING WALL AT TOE OF SLOPE, 6' FROM LOWER SIDE OF EXISTING GABION WALLS, AND 10' FROM UPPER SIDE OF GABION WALLS. DASHED LINE DELINEATES OFFSET SETBACK LINE.

CONTRACTOR NOTE

CONTRACTOR SHALL BE RESPONSIBLE TO REPAIR OR REPLACE ANY DAMAGED EXISTING IMPROVEMENTS DESIGNATED TO BE PROTECTED-IN-PLACE AND/OR IMPROVEMENTS LOCATED OUTSIDE THE LIMITS-OF-WORK. CONTRACTOR SHALL PHOTOGRAPH AND RECORD WITH THE CITY THE CONDITION OF THE SITE PRIOR TO COMMENCEMENT OF THE WORK. THIS INCLUDES PROPOSED STAGING AREAS AND CONSTRUCTION ACCESS ROUTES.

LATERAL PIPE SIZING LEGEND

NO 1/2" PIPE PERMITTED

- 3/4" MINIMUM
- 1"
- 1-1/4"
- 1-1/2"
- 2"

REFER TO LEGEND ON SHEET L-3.01 FOR TYPE

ROTOR LEGEND - RECYCLED WATER

SYMBOL	DESCRIPTION	MANUFACTURER PART NO.	NOZZLE	PATTERN (DEGREE)	FLOW (GPM)	RADIUS (FEET)	PRES (PSI)	PRECIP (IN/HR)
2.0	ROTOR ON RISER	RAINBIRD 5000-S PL FC R NP	2.0 LA	FULL	2.02	24-32'	45	0.19
1.0	ROTOR ON RISER	RAINBIRD 5000-S PL PC R NP	1.0 LA	HALF	1.01	24-32'	45	0.23
1.0	ROTOR ON RISER	RAINBIRD 5000-S PL PC R NP	1.0 LA	QRTR	1.01	24-32'	45	0.46
REFER TO DETAIL 3.00 FOR INSTALLATION OF ROTOR ON RISER								
M1	ROTATOR ON RISER	HUNTER PROS-00 - PRS 40	HUNTER MP-1000	360	0.75	8-14'	40	0.45
M1	ROTATOR ON RISER	HUNTER PROS-00 - PRS 40	HUNTER MP-1000	90-210	0.37	8-14'	40	0.45
M1	ROTATOR ON RISER	HUNTER PROS-00 - PRS 40	HUNTER MP-1000	90-210	0.19	8-14'	40	0.45
M2	ROTATOR ON RISER	HUNTER PROS-00 - PRS 40	HUNTER MP-2000	360	1.47	14-20'	40	0.45
M2	ROTATOR ON RISER	HUNTER PROS-00 - PRS 40	HUNTER MP-2000	90-210	0.74	14-20'	40	0.45
M2	ROTATOR ON RISER	HUNTER PROS-00 - PRS 40	HUNTER MP-2000	90-210	0.40	14-20'	40	0.45
REFER TO DETAIL 3.01 FOR INSTALLATION OF ROTATOR ON RISER								

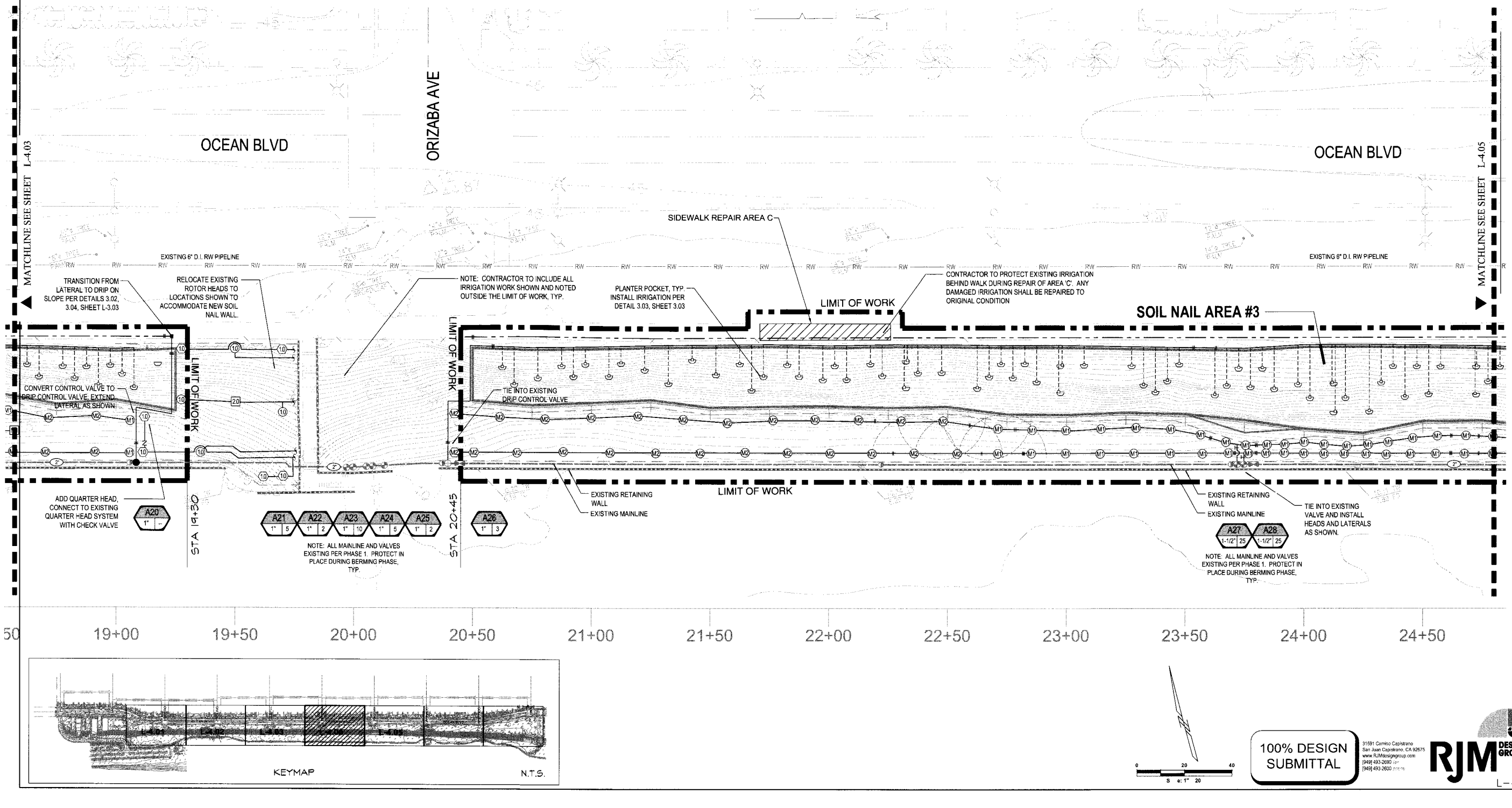

0 20 40
S e: 1" 20

100% DESIGN SUBMITTAL

31591 Camino Capistrano
San Juan Capistrano, CA 92675
www.RJMdesigngroup.com
(949) 493-2690
(949) 493-2600

RJM DESIGN GROUP

L-4.04

REVISIONS

No.	DATE	SHEET	APPROVAL	DESCRIPTION
AS-BUILT:			REF. DWG. X-XXXX	DWG. X-XXXX
			DWG. X-XXXX	

DESIGNED BY: S.H.
DRAWN BY: S.H.
DESIGN CHECK BY:
DRAFTING CHECK BY:

LANDSCAPE ARCHITECT ★ LICENSED ★ STATE OF CALIFORNIA ★ LICENSE NO. 3162 ★ EXPIRES 8/31/2021 ★ JOHN A. RAMIREZ

OCEAN BOULEVARD EROSION AND ENHANCEMENT PROJECT, PHASE 2
IRRIGATION PLAN

GRAPHIC SCALE 0 1 2 3
PAGE
FIELD BOOK

NO. R- 6959
JOB NO. PW8260-13
SHEET 33 OF 44
DRAWING NO. B-4562

IRRIGATION OFFSET NOTE

IRRIGATION HEADS ARE TO BE PLACED 4'-6" OFFSET FROM RETAINING WALL AT TOE OF SLOPE, 6' FROM LOWER SIDE OF EXISTING GABION WALLS, AND 10' FROM UPPER SIDE OF GABION WALLS. DASHED LINE DELINEATES OFFSET SETBACK LINE.

CONTRACTOR NOTE

CONTRACTOR SHALL BE RESPONSIBLE TO REPAIR OR REPLACE ANY DAMAGED EXISTING IMPROVEMENTS DESIGNATED TO BE PROTECTED-IN-PLACE AND/OR IMPROVEMENTS LOCATED OUTSIDE THE LIMITS-OF-WORK. CONTRACTOR SHALL PHOTOGRAPH AND RECORD WITH THE CITY THE CONDITION OF THE SITE PRIOR TO COMMENCEMENT OF THE WORK. THIS INCLUDES PROPOSED STAGING AREAS AND CONSTRUCTION ACCESS ROUTES.

LATERAL PIPE SIZING LEGEND

NO 1/2" PIPE PERMITTED

- 3/4" MINIMUM
- 1"
- 1-1/4"
- 1-1/2"
- 2"

REFER TO LEGEND ON SHEET L-3.01 FOR TYPE

ROTOR LEGEND - RECYCLED WATER

SYMBOL	DESCRIPTION	MANUFACTURER PART NO.	NOZZLE	PATTERN (DEGREE)	FLOW (GPM)	RADIUS (FEET)	PRES (PSI)	PRECIP (IN/HR)
2.0	ROTOR ON RISER	RAINBIRD 5000-S PL FC R NP	2.0 LA	FULL	2.02	24-32'	45	0.19
1.0	ROTOR ON RISER	RAINBIRD 5000-S PL PC R NP	1.0 LA	HALF	1.01	24-32'	45	0.23
1.0	ROTOR ON RISER	RAINBIRD 5000-S PL PC R NP	1.0 LA	QRTR	1.01	24-32'	45	0.46
REFER TO DETAIL 3.00 FOR INSTALLATION OF ROTOR ON RISER								
M1	ROTATOR ON RISER	HUNTER PROS-00 - PRS 40	HUNTER MP-1000	360	0.75	8-14'	40	0.45
M1	ROTATOR ON RISER	HUNTER PROS-00 - PRS 40	HUNTER MP-1000	90-210	0.37	8-14'	40	0.45
M1	ROTATOR ON RISER	HUNTER PROS-00 - PRS 40	HUNTER MP-1000	90-210	0.19	8-14'	40	0.45
M2	ROTATOR ON RISER	HUNTER PROS-00 - PRS 40	HUNTER MP-2000	360	1.47	14-20'	40	0.45
M2	ROTATOR ON RISER	HUNTER PROS-00 - PRS 40	HUNTER MP-2000	90-210	0.74	14-20'	40	0.45
M2	ROTATOR ON RISER	HUNTER PROS-00 - PRS 40	HUNTER MP-2000	90-210	0.40	14-20'	40	0.45
REFER TO DETAIL 3.01 FOR INSTALLATION OF ROTATOR ON RISER								

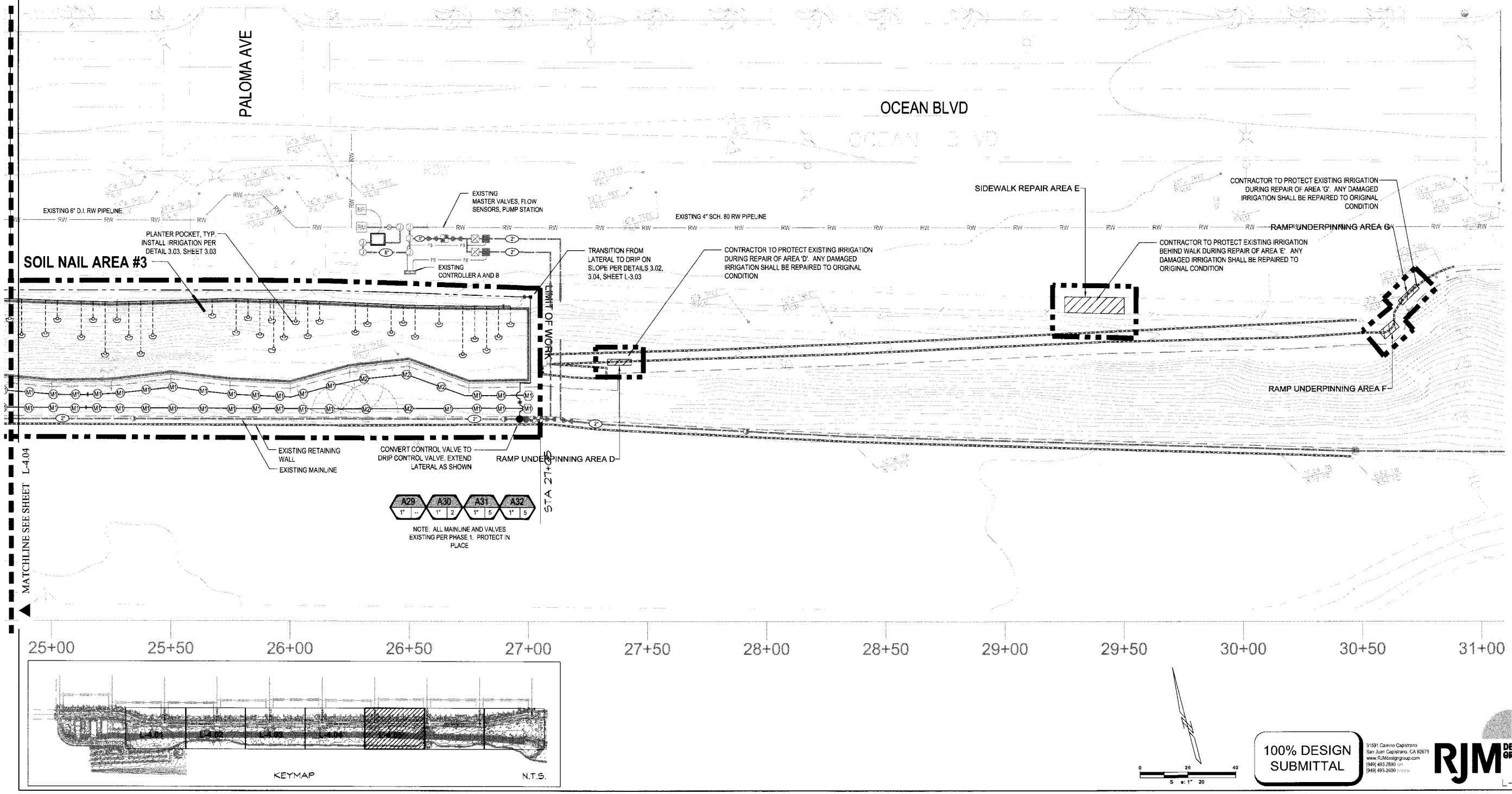

KEYMAP N.T.S.

0 20 40
Scale: 1" = 20'

100% DESIGN SUBMITTAL

RJM DESIGN GROUP
31591 Camino Capistrano
San Juan Capistrano, CA 92675
www.RJMdesigngroup.com
(949) 493-2600 tel
(949) 493-2600 FAX

L-4.05

REVISIONS

No.	DATE	SHEET	APPROVAL	DESCRIPTION

AS-BUILT:

REF. DWG. X-XXXX DWG. X-XXXX
DWG. X-XXXX

DESIGNED BY: S.H.
DRAWN BY: S.H.
DESIGN CHECK BY:
DRAFTING CHECK BY:

LICENSED LANDSCAPE ARCHITECT ☆ CALIFORNIA ☆ LANDSCAPE ARCHITECT LICENSE NO. 2152 ☆ STATE OF CALIFORNIA ☆ JOE RUSSO

OCEAN BOULEVARD EROSION AND ENHANCEMENT PROJECT, PHASE 2 IRRIGATION PLAN

GRAPHIC SCALE 0 1 2 3
PAGE
FIELD BOOK

NO. R- 6959
JOB NO. PW8260-13
SHEET 34 OF 44
DRAWING NO. B-4562

IRRIGATION OFFSET NOTE

IRRIGATION HEADS ARE TO BE PLACED 4'-6" OFFSET FROM RETAINING WALL AT TOE OF SLOPE, 6' FROM LOWER SIDE OF EXISTING GABION WALLS, AND 10' FROM UPPER SIDE OF GABION WALLS. DASHED LINE DELINEATES OFFSET SETBACK LINE.

CONTRACTOR NOTE

CONTRACTOR SHALL BE RESPONSIBLE TO REPAIR OR REPLACE ANY DAMAGED EXISTING IMPROVEMENTS DESIGNATED TO BE PROTECTED-IN-PLACE AND/OR IMPROVEMENTS LOCATED OUTSIDE THE LIMITS-OF-WORK. CONTRACTOR SHALL PHOTOGRAPH AND RECORD WITH THE CITY THE CONDITION OF THE SITE PRIOR TO COMMENCEMENT OF THE WORK. THIS INCLUDES PROPOSED STAGING AREAS AND CONSTRUCTION ACCESS ROUTES.

LATERAL PIPE SIZING LEGEND

NO 1/2" PIPE PERMITTED

3/4" MINIMUM	
1"	
1-1/4"	
1-1/2"	
2"	REFER TO LEGEND ON SHEET L-3.01 FOR TYPE

ROTOR LEGEND - RECYCLED WATER

SYMBOL	DESCRIPTION	MANUFACTURER PART NO.	NOZZLE	PATTERN (DEGREE)	FLOW (GPM)	RADIUS (FEET)	PRES (PSI)	PRECIP (IN/HR)
20	ROTOR ON RISER	RAINBIRD 5000-S PL FC R NP	2.0 LA	FULL	2.02	24-32'	45	0.19
10	ROTOR ON RISER	RAINBIRD 5000-S PL PC R NP	1.0 LA	HALF	1.01	24-32'	45	0.23
10	ROTOR ON RISER	RAINBIRD 5000-S PL PC R NP	1.0 LA	QRTR	1.01	24-32'	45	0.46
REFER TO DETAIL 3.00 FOR INSTALLATION OF ROTOR ON RISER								
M1	ROTATOR ON RISER	HUNTER PROS-00 - PRS 40	HUNTER MP-1000	360	0.75	8-14'	40	0.45
M1	ROTATOR ON RISER	HUNTER PROS-00 - PRS 40	HUNTER MP-1000	90-210	0.37	8-14'	40	0.45
M1	ROTATOR ON RISER	HUNTER PROS-00 - PRS 40	HUNTER MP-1000	90-210	0.19	8-14'	40	0.45
M2	ROTATOR ON RISER	HUNTER PROS-00 - PRS 40	HUNTER MP-2000	360	1.47	14-20'	40	0.45
M2	ROTATOR ON RISER	HUNTER PROS-00 - PRS 40	HUNTER MP-2000	90-210	0.74	14-20'	40	0.45
M2	ROTATOR ON RISER	HUNTER PROS-00 - PRS 40	HUNTER MP-2000	90-210	0.40	14-20'	40	0.45
REFER TO DETAIL 3.01 FOR INSTALLATION OF ROTATOR ON RISER								

CONTRACTOR NOTE

CONTRACTOR SHALL BE RESPONSIBLE TO REPAIR OR REPLACE ANY DAMAGED EXISTING IMPROVEMENTS DESIGNATED TO BE PROTECTED-IN-PLACE AND/OR IMPROVEMENTS LOCATED OUTSIDE THE LIMITS-OF-WORK. CONTRACTOR SHALL PHOTOGRAPH AND RECORD WITH THE CITY THE CONDITION OF THE SITE PRIOR TO COMMENCEMENT OF THE WORK. THIS INCLUDES PROPOSED STAGING AREAS AND CONSTRUCTION ACCESS ROUTES.

KEYMAP N.T.S.

100% DESIGN SUBMITTAL

RJM DESIGN GROUP
31591 Camino Capistrano
San Juan Capistrano, CA 92675
www.RJMdesigngroup.com

DESIGNED BY: S.H.
DRAWN BY: S.H.
DESIGN CHECK BY:
DRAFTING CHECK BY:
REVISIONS — NO. | DATE | SHEET | APPROVAL | DESCRIPTION
AS-BUILT:
REF. DWG. X-XXXX DWG. X-XXXX
DWG. X-XXXX

OCEAN BOULEVARD EROSION AND ENHANCEMENT PROJECT, PHASE 2
IRRIGATION PLAN

GRAPHIC SCALE 0 1 2 3
PAGE
FIELD BOOK
NO. R- 6959
JOB NO. PW8260-13
SHEET 35 OF 44
DRAWING NO. B-4562
L-4.06

CONTRACTOR NOTE

CONTRACTOR SHALL BE RESPONSIBLE TO REPAIR OR REPLACE ANY DAMAGED EXISTING IMPROVEMENTS DESIGNATED TO BE PROTECTED-IN-PLACE AND/OR IMPROVEMENTS LOCATED OUTSIDE THE LIMITS-OF-WORK. CONTRACTOR SHALL PHOTOGRAPH AND RECORD WITH THE CITY THE CONDITION OF THE SITE PRIOR TO COMMENCEMENT OF THE WORK. THIS INCLUDES PROPOSED STAGING AREAS AND CONSTRUCTION ACCESS ROUTES.

SHEET INSERTED FOR REFERENCE ONLY

MATCHLINE SEE SHEET L-4.06

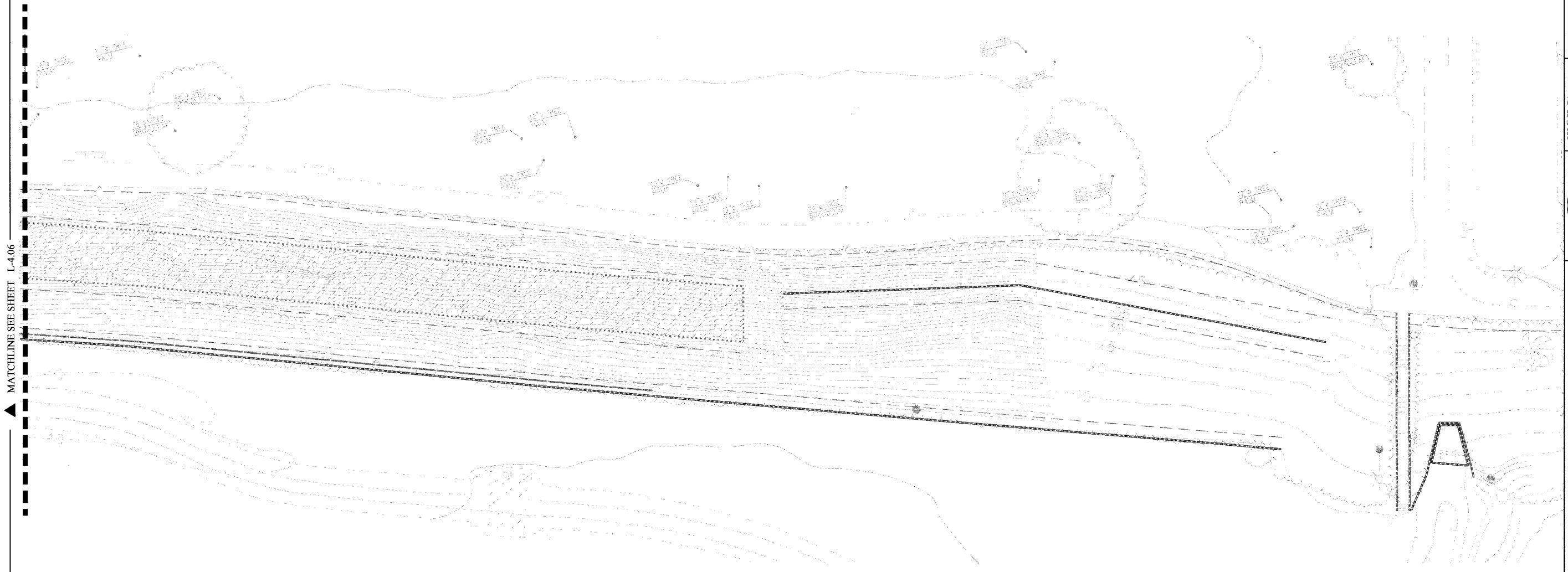

37+50 38+00 38+50 39+00 39+50 40+00 40+50 41+00 41+50 42+00 42+50 43+00 43+50

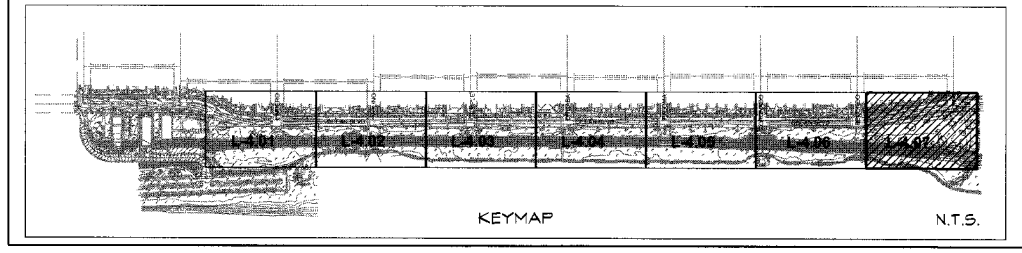

KEYMAP N.T.S.

0 20 40
Scale: 1" = 20'

100% DESIGN SUBMITTAL

31591 Camino Capistrano
San Juan Capistrano, CA 92675
www.RJMdesigngroup.com
(949) 493-2600 tel
(949) 493-2600 phone

RJM DESIGN GROUP

L-4.07

REVISIONS			
No.	DATE	SHEET	APPROVAL

DESCRIPTION

AS-BUILT: REF. DWG. X-XXXX DWG. X-XXXX
DWG. X-XXXX

DESIGNED BY: S.H.
DRAWN BY: S.H.
DESIGN CHECK BY:
DRAFTING CHECK BY:

LICENSED LANDSCAPE ARCHITECT ★ LICENSE NO. 2192 ★ STATE OF CALIFORNIA
Expires 08/31/2012

OCEAN BOULEVARD EROSION AND ENHANCEMENT PROJECT, PHASE 2
IRRIGATION PLAN

GRAPHIC SCALE 0 1 2 3

PAGE

FIELD BOOK

NO. R- 6959

JOB NO. PW8260-13

SHEET 36 OF 44

DRAWING NO. B-4562

SHRUB LEGEND

		BOTANICAL NAME COMMON NAME	SIZE/ SPACING	TOTAL QTY.	REMARKS
	S-1	LANTANA MONTEVIDENSIS PURPLE TRAILING LANTANA	1 GAL. @ 4'-0" O.C.	201	DETAILS A, B & D, SHEET L-6.01
	S-2	ATRIPLEX CANESCENS FOUR-WING SALTBUSH	1 GAL. @ 5'-0" O.C.	151	DETAILS A, B & D, SHEET L-6.01
	S-3	BACCHARIS PILULARIS 'PIGEON POINT' COYOTE BUSH	1 GAL. @ 5'-0" O.C.	205	DETAILS A, B & D, SHEET L-6.01
	S-4	BOUGAINVILLEA 'SAN DIEGO RED' BOUGAINVILLEA VARIETY	1 GAL. @ 5'-0" O.C.	86	DETAILS A, B & D, SHEET L-6.01
	S-5	CEANOTHUS 'JULIA PHELPS' NCN	1 GAL. @ 5'-0" O.C.	185	DETAILS A, B & D, SHEET L-6.01
	S-6	MYOPORUM 'PACIFICUM' N.C.N.	1 GAL. @ 5'-0" O.C.	205	DETAILS A, B & D, SHEET L-6.01
	S-7	CEANOTHUS GRISEUS HORIZONTALIS 'YANKEE POINT' CARMEL CREEP	1 GAL. @ 4'-0" O.C.	89	DETAILS A, B & D, SHEET L-6.01
⊕	S-8	RHUS INTEGRIFOLIA LEMONADEBERRY	5 GAL. @ 6'-0" O.C.	149	DETAILS A, B & D, SHEET L-6.01
	S-9	TECOMA CAPENSIS CAPE HONEYSUCKLE	1 GAL. @ 6'-0" O.C.	134	DETAILS A, B & D, SHEET L-6.01

		BOTANICAL NAME COMMON NAME	SIZE/ SPACING	TOTAL QTY.	REMARKS
	S-10	ENCELIA CALIFORNICA CALIFORNIA ENCELIA	1 GAL. @ 4'-0" O.C.	244	DETAILS A, B & D, SHEET L-6.01
○	S-11	HETEROMELES ARBUTIFOLIA TOYON	5 GAL. @ 6'-0" O.C.	149	DETAILS A, B & D, SHEET L-6.01
	S-12	CEANOTHUS MARITIMUS MARITIME CEANOTHUS	1 GAL. @ 4'-0" O.C.	162+	DETAILS A, B & D, SHEET L-6.01
NO SYM.	S-13	ROSMARINUS OFFICINALIS 'PROSTRATUS' ROSEMARY	1 GAL.	SEE BELOW	DETAILS A, B & D, SHEET L-6.01
	EP-1	EXISTING PALM TREE - TYPE VARIES	VARIES	4	BOX EXISTING PALMS ON-SITE. MAINTAIN DURING CONSTRUCTION. REPLANT AS DIRECTED BY CITY'S AUTH. REP.

BID ALT #1

** SOIL NAIL PLANTER POCKETS, IRRIGATION, AND PLANTING SHALL BE BID AS SEPARATE ITEMS UNDER BID ALT#1 **

▽	PP	SOIL NAIL PLANTER POCKET **S-12 & S-13** ** ALTERNATE SHRUB TYPES ALONG LENGTH OF SOIL NAIL WALL, TYP.**	1 PER POCKET	(109) S-12 (110) S-13	DETAIL C SHEET L-6.01

(##) S-X — (##) SHRUB QUANTITY, SEE LEGEND; S-X SHRUB TYPE, SEE LEGEND

HYDROSEED MIX

** AS PART OF THIS PROJECT, THE CONTRACTOR SHALL APPLY THE FOLLOWING HYDROSEED MIX TO ALL 'PLANTING AREAS WITHIN THE LIMITS OF WORK (PER SHEETS 37 THRU 43), INCLUDING ALL SIDEWALK, HANDRAIL, UNDERPINNING REPAIR AREAS OUTSIDE THE LIMIT OF WORK. REFER TO SPECIFICATIONS (SECTION 300-9.1) FOR JUTE NETTING/HYDROSEED APPLICATION. **

BOTANICAL NAME COMMON NAME	PURE LIVE SEED LBS/ACRE
ABRONIA MARITIMA	0.50
ACHILLEA MILLEFOLIUM	1.00
AMBROSIA CHAMISSONIS	2.00
ATRIPLEX LENTIFORMIS BREWERII	2.50
ATRIPLEX POLYCARPA	0.50
BACCHARIS PILULARIS	0.10
CAMISSONIA CHEIRANTHIFOLIA	2.00
COREOPSIS MARITIMA	0.50
ENCELIA CALIFORNICA	1.00
ERIOGONUM PARVIFOLIUM	1.00
ERIOPHYLLUM CONFERTIFLORUM	1.00
ESCHSCHOLZIA CALIFORNICA	2.50
ISOCOMA MENZIESII	1.00
LASTHENIA CALIFORNICA	0.50
LOTUS SCOPARIUS	4.00
LUPINUS SUCCULENTUS	2.50
MIMULUS AURANTIACUS LONGIFLORUS	0.20
VULPIA MICROSTACHYS	8.00

*NOTE: PLS LBS./ACRE = LBS./ACRE. PLS LBS./ACRE IS THE MOST ACCURATE WAY TO SPECIFY SEEDS AND TAKES INTO ACCOUNT BOTH PURITY AND GERMINATION. PLS % = % PURITY x % GERMINATION.

FOR SLOPES STEEPER THAN 2:1, WE SUGGEST UTILIZING THE FOLLOWING HYDROSEEDING SLURRY COMPONENTS:

PRODUCT	APPLICATION RATE
FLEXTERRA FLEXIBLE GROWTH MEDIUM	3000 LBS/ACRE
HUMATE ORGANIC SOIL CONDITIONER	500 LBS/ACRE
BIOSOL MIX 7-2-3 ORGANIC FERTILIZER	800 LBS/ACRE
AM 120 MYCORRHIZAL INOCULUM	60 LBS/ACRE

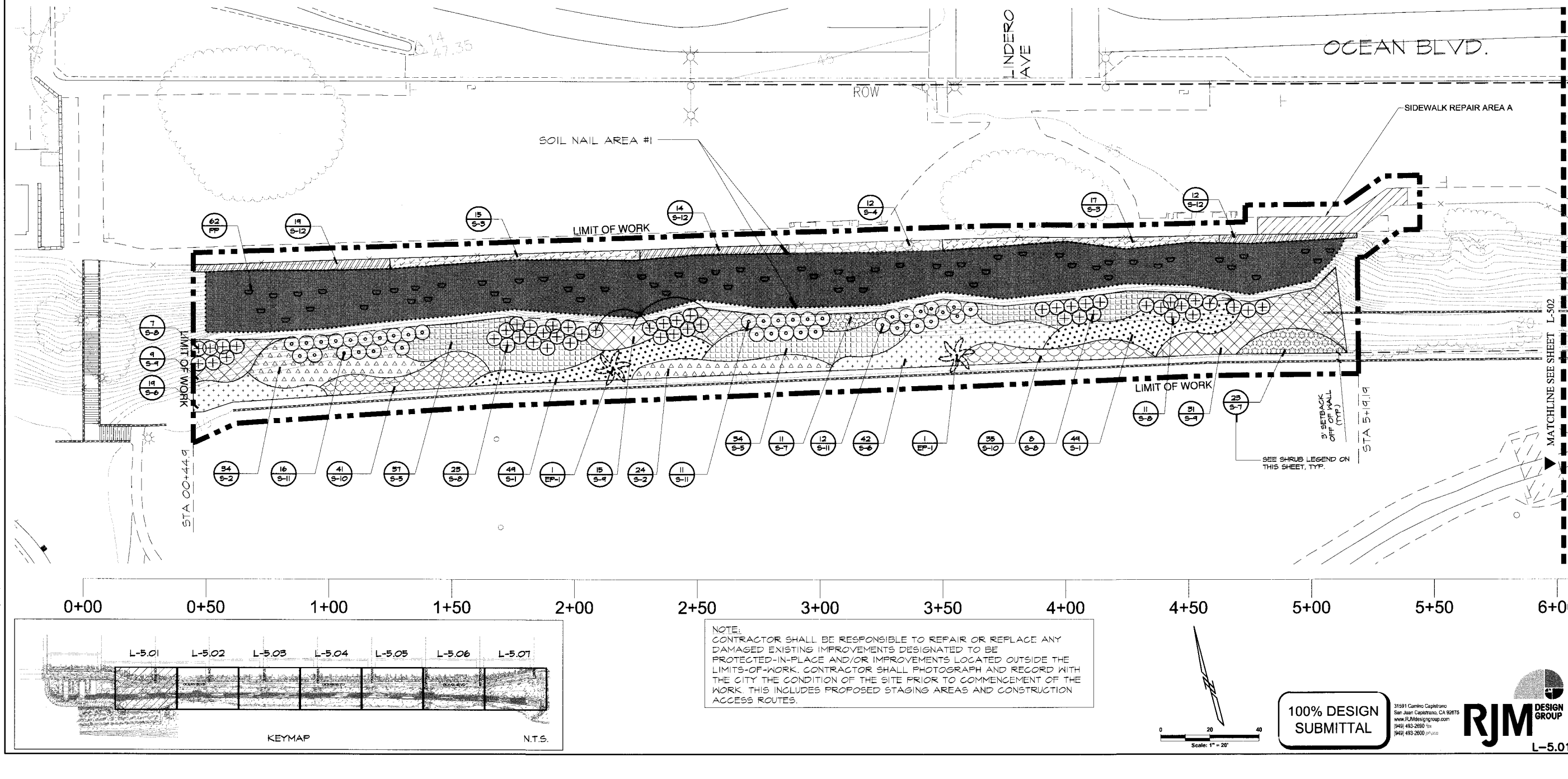

NOTE:
CONTRACTOR SHALL BE RESPONSIBLE TO REPAIR OR REPLACE ANY DAMAGED EXISTING IMPROVEMENTS DESIGNATED TO BE PROTECTED-IN-PLACE AND/OR IMPROVEMENTS LOCATED OUTSIDE THE LIMITS-OF-WORK. CONTRACTOR SHALL PHOTOGRAPH AND RECORD WITH THE CITY THE CONDITION OF THE SITE PRIOR TO COMMENCEMENT OF THE WORK. THIS INCLUDES PROPOSED STAGING AREAS AND CONSTRUCTION ACCESS ROUTES.

0 20 40
Scale: 1" = 20'

100% DESIGN SUBMITTAL

31591 Camino Capistrano
San Juan Capistrano, CA 92675
www.RJMdesigngroup.com
(949) 493-2690 fax
(949) 493-2600 phone

RJM DESIGN GROUP

L-5.01

REVISIONS

No.	DATE	SHEET	APPROVAL	DESCRIPTION

DESIGNED BY: L.M.
DRAWN BY: M.L.
DESIGN CHECK BY:
DRAFTING CHECK BY:
AS-BUILT:
REF: DWG. X-XXXX DWG. X-XXXX
DWG. X-XXXX

LANDSCAPE ARCHITECT ☆ CALIFORNIA ☆ LICENSED
LARRY L. MINDEL LANDSCAPE ARCHITECT 2152
RENEWAL 08/31/2014

OCEAN BOULEVARD EROSION AND ENHANCEMENT PROJECT, PHASE 2
PLANTING PLAN

GRAPHIC SCALE 0 1 2 3

FIELD BOOK | PAGE

NO. R- 6959

JOB NO. PW8260-13

SHEET 37 OF 44

DRAWING NO. B-4562

LAST SAVED BY: michael
PLOT DATE: Oct 18, 12 SAVED PATH: P:\688\688-01-Ocean Blvd. Bluffs Phase 2\688-01_CD\688-01-1st-Subm

SHEET INSERTED FOR REFERENCE ONLY

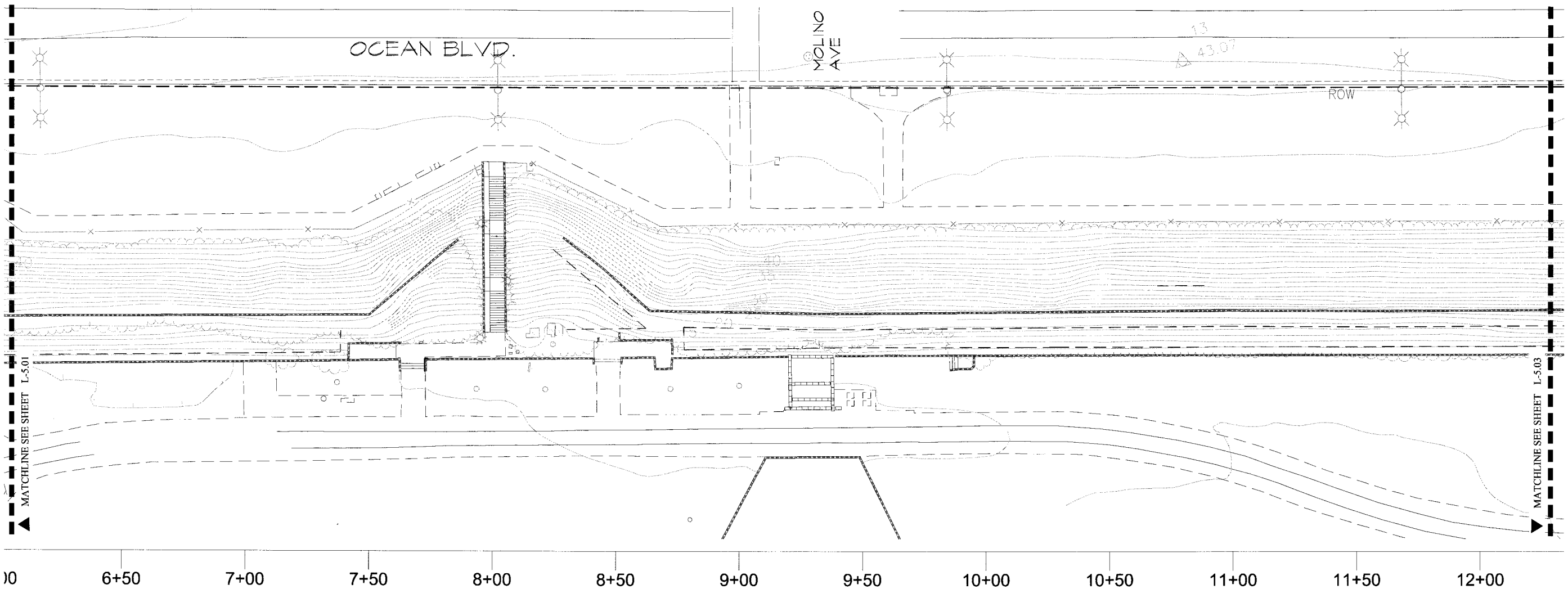

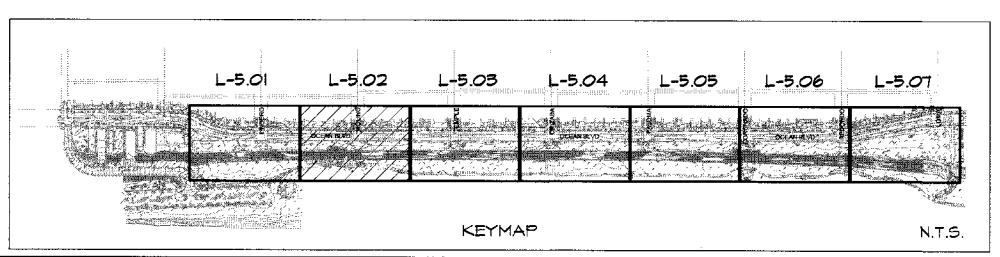

NOTE:
CONTRACTOR SHALL BE RESPONSIBLE TO REPAIR OR REPLACE ANY DAMAGED EXISTING IMPROVEMENTS DESIGNATED TO BE PROTECTED-IN-PLACE AND/OR IMPROVEMENTS LOCATED OUTSIDE THE LIMITS-OF-WORK. CONTRACTOR SHALL PHOTOGRAPH AND RECORD WITH THE CITY THE CONDITION OF THE SITE PRIOR TO COMMENCEMENT OF THE WORK. THIS INCLUDES PROPOSED STAGING AREAS AND CONSTRUCTION ACCESS ROUTES.

0 20 40
Scale: 1" = 20'

100% DESIGN SUBMITTAL

31591 Camino Capistrano
San Juan Capistrano, CA 92675
www.RJMdesigngroup.com
(949) 493-2690 fax
(949) 493-2600 phone

RJM DESIGN GROUP

L-5.02

REVISIONS

No.	DATE	SHEET	APPROVAL	DESCRIPTION

AS-BUILT:

REF: DWG. X-XXXX DWG. X-XXXX
DWG. X-XXXX

DESIGNED BY: L.M.
DRAWN BY: M.L.
DESIGN CHECK BY:
DRAFTING CHECK BY:

LICENSED LANDSCAPE ARCHITECT
LARRY D. MOURI LICENSE NO. 2152
STATE OF CALIFORNIA

OCEAN BOULEVARD EROSION AND ENHANCEMENT PROJECT, PHASE 2
PLANTING PLAN (FOR REFERENCE ONLY)

GRAPHIC SCALE 0 1 2 3

PAGE

FIELD BOOK

NO. R- 6959

JOB NO. PW8260-13

SHEET 38 OF 44

DRAWING NO. B-4562

LAST SAVED BY: michael
PLOT DATE: Oct. 18, 12 SAVED PATH: P:\888\888-01-Ocean Blvd. Bluffs Phase 2\888-01_CD\888-01-1st-Subm

SHRUB LEGEND

		BOTANICAL NAME COMMON NAME	SIZE/ SPACING	TOTAL QTY.	REMARKS
	S-1	LANTANA MONTEVIDENSIS PURPLE TRAILING LANTANA	1 GAL. @ 4'-0" O.C.	201	DETAILS A, B & D, SHEET L-6.01
	S-2	ATRIPLEX CANESCENS FOUR-WING SALTBUSH	1 GAL. @ 5'-0" O.C.	151	DETAILS A, B & D, SHEET L-6.01
	S-3	BACCHARIS PILULARIS 'PIGEON POINT' COYOTE BUSH	1 GAL. @ 5'-0" O.C.	205	DETAILS A, B & D, SHEET L-6.01
	S-4	BOUGAINVILLEA 'SAN DIEGO RED' BOUGAINVILLEA VARIETY	1 GAL. @ 5'-0" O.C.	86	DETAILS A, B & D, SHEET L-6.01
	S-5	CEANOTHUS 'JULIA PHELPS' NCN	1 GAL. @ 5'-0" O.C.	185	DETAILS A, B & D, SHEET L-6.01
	S-6	MYOPORUM 'PACIFICUM' N.C.N.	1 GAL. @ 5'-0" O.C.	205	DETAILS A, B & D, SHEET L-6.01
	S-7	CEANOTHUS GRISEUS HORIZONTALIS 'YANKEE POINT' CARMEL CREEP	1 GAL. @ 4'-0" O.C.	89	DETAILS A, B & D, SHEET L-6.01
	S-8	RHUS INTEGRIFOLIA LEMONADEBERRY	5 GAL. @ 6'-0" O.C.	149	DETAILS A, B & D, SHEET L-6.01
	S-9	TECOMA CAPENSIS CAPE HONEYSUCKLE	1 GAL. @ 6'-0" O.C.	134	DETAILS A, B & D, SHEET L-6.01
	S-10	ENCELIA CALIFORNICA CALIFORNIA ENCELIA	1 GAL. @ 4'-0" O.C.	244	DETAILS A, B & D, SHEET L-6.01
	S-11	HETEROMELES ARBUTIFOLIA TOYON	5 GAL. @ 6'-0" O.C.	149	DETAILS A, B & D, SHEET L-6.01
	S-12	CEANOTHUS MARITIMUS MARITIME CEANOTHUS	1 GAL. @ 4'-0" O.C.	162+	DETAILS A, B & D, SHEET L-6.01
NO SYM.	S-13	ROSMARINUS OFFICINALIS 'PROSTRATUS' ROSEMARY	1 GAL.	SEE BELOW	DETAILS A, B & D, SHEET L-6.01
	EP-1	EXISTING PALM TREE - TYPE VARIES	VARIES	4	BOX EXISTING PALMS ON-SITE. MAINTAIN DURING CONSTRUCTION. REPLANT AS DIRECTED BY CITY'S AUTH. REP.

BID ALT #1

** SOIL NAIL PLANTER POCKETS, IRRIGATION, AND PLANTING SHALL BE BID AS SEPARATE ITEMS UNDER BID ALT#1 **

	PP	SOIL NAIL PLANTER POCKET **S-12 & S-13** ** ALTERNATE SHRUB TYPES ALONG LENGTH OF SOIL NAIL WALL, TYP.**	1 PER POCKET	(104) S-12 (110) S-13	DETAIL C SHEET L-6.01

HYDROSEED MIX

** AS PART OF THIS PROJECT, THE CONTRACTOR SHALL APPLY THE FOLLOWING HYDROSEED MIX TO ALL PLANTING AREAS WITHIN THE LIMITS OF WORK (PER SHEETS 37 THRU 43), INCLUDING ALL SIDEWALK, HANDRAIL, UNDERPINNING REPAIR AREAS OUTSIDE THE LIMIT OF WORK. REFER TO SPECIFICATIONS (SECTION 300-9.1) FOR JUTE NETTING/HYDROSEED APPLICATION. **

BOTANICAL NAME COMMON NAME	PURE LIVE SEED LBS./ACRE
ABRONIA MARITIMA	0.50
ACHILLEA MILLEFOLIUM	1.00
AMBROSIA CHAMISSONIS	2.00
ATRIPLEX LENTIFORMIS BREWERII	2.50
ATRIPLEX POLYCARPA	0.50
BACCHARIS PILULARIS	0.10
CAMISSONIA CHEIRANTHIFOLIA	2.00
COREOPSIS MARITIMA	0.50
ENCELIA CALIFORNICA	1.00
ERIOGONUM PARVIFOLIUM	1.00
ERIOPHYLLUM CONFERTIFLORUM	1.00
ESCHSCHOLZIA CALIFORNICA	2.50
ISOCOMA MENZIESII	1.00
LASTHENIA CALIFORNICA	0.50
LOTUS SCOPARIUS	4.00
LUPINUS SUCCULENTUS	2.50
MIMULUS AURANTIACUS LONGIFLORUS	0.20
VULPIA MICROSTACHYS	8.00

*NOTE: PLS LBS/ACRE = LBS/ACRE. PLS LBS/ACRE IS THE MOST ACCURATE WAY TO SPECIFY SEEDS AND TAKES INTO ACCOUNT BOTH PURITY AND GERMINATION. PLS % = % PURITY x % GERMINATION.

FOR SLOPES STEEPER THAN 2:1, WE SUGGEST UTILIZING THE FOLLOWING HYDROSEEDING SLURRY COMPONENTS.

PRODUCT	APPLICATION RATE
FLEXTERRA FLEXIBLE GROWTH MEDIUM	3000 LBS/ACRE
HUMATE ORGANIC SOIL CONDITIONER	500 LBS/ACRE
BIOSOL MIX 7-2-3 ORGANIC FERTILIZER	800 LBS/ACRE
AM 120 MYCORRHIZAL INOCULUM	60 LBS/ACRE

##/S-X — ## = SHRUB QUANTITY, SEE LEGEND; S-X = SHRUB TYPE, SEE LEGEND

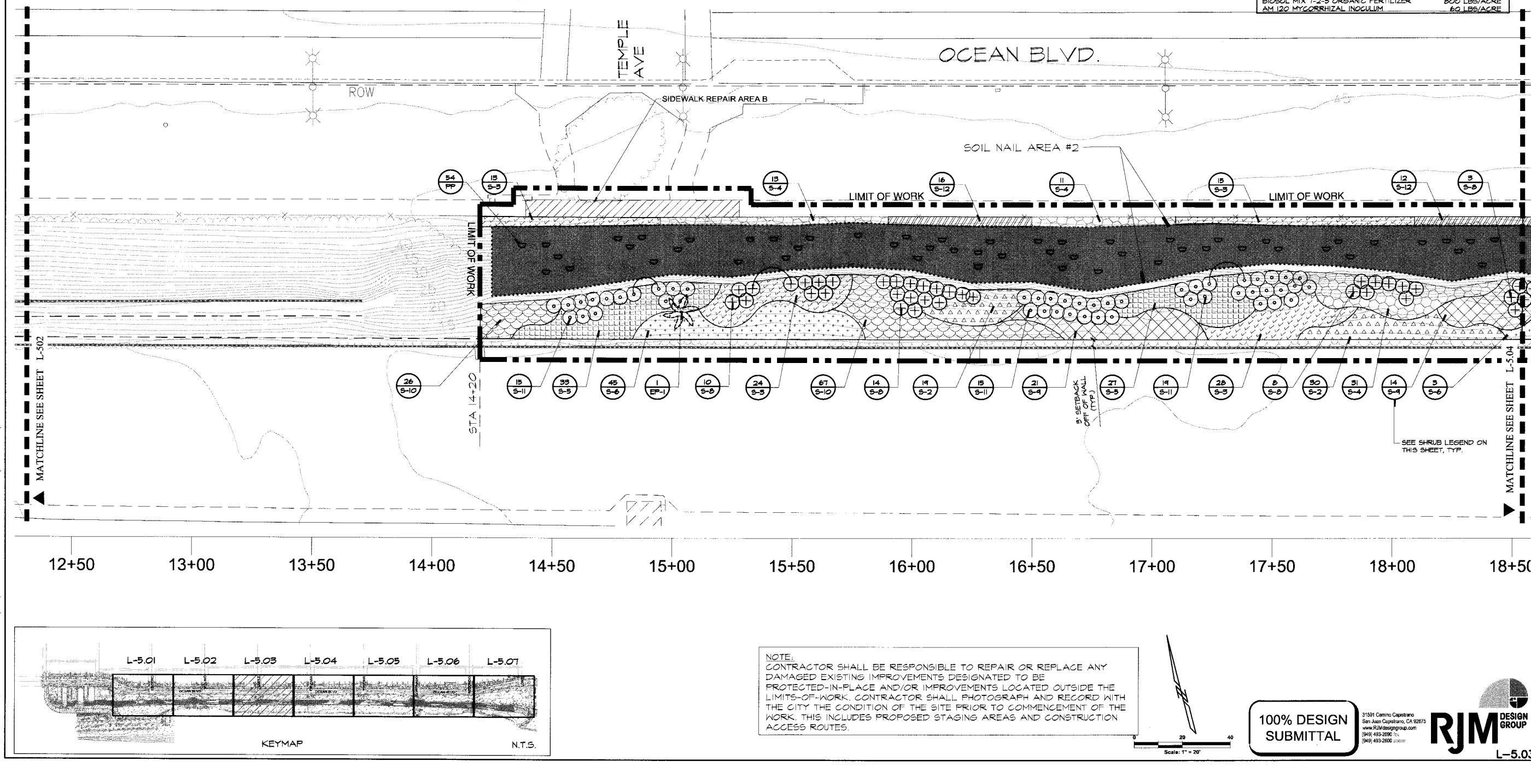

NOTE:
CONTRACTOR SHALL BE RESPONSIBLE TO REPAIR OR REPLACE ANY DAMAGED EXISTING IMPROVEMENTS DESIGNATED TO BE PROTECTED-IN-PLACE AND/OR IMPROVEMENTS LOCATED OUTSIDE THE LIMITS-OF-WORK. CONTRACTOR SHALL PHOTOGRAPH AND RECORD WITH THE CITY THE CONDITION OF THE SITE PRIOR TO COMMENCEMENT OF THE WORK. THIS INCLUDES PROPOSED STAGING AREAS AND CONSTRUCTION ACCESS ROUTES.

Scale: 1" = 20'

100% DESIGN SUBMITTAL

RJM DESIGN GROUP
31591 Camino Capistrano
San Juan Capistrano, CA 92675
www.RJMdesigngroup.com
(949) 493-2690 TEL
(949) 493-2600 FAX

L-5.03

REVISIONS: No. | DATE | SHEET | APPROVAL | DESCRIPTION

AS-BUILT:

REF. DWG. X-XXXX DWG. X-XXXX

DESIGNED BY: L.M.
DRAWN BY: M.L.
DESIGN CHECK BY:
DRAFTING CHECK BY:

LICENSED LANDSCAPE ARCHITECT — LANDSCAPE ARCHITECT LICENSE NO. 2192 — STATE OF CALIFORNIA

OCEAN BOULEVARD EROSION AND ENHANCEMENT PROJECT, PHASE 2 PLANTING PLAN

GRAPHIC SCALE | PAGE | FIELD BOOK

NO. R- 6959

JOB NO. PW8260-13

SHEET 39 OF 44

DRAWING NO. B-4562

LAST SAVED BY: michael
PLOT DATE: Oct 18, 12
SAVED PATH: P:\888\888-01-Ocean Blvd. Bluffs Phase 2\888-01_CD\888-01-1st-Subm

SHRUB LEGEND

		BOTANICAL NAME COMMON NAME	SIZE/ SPACING	TOTAL QTY.	REMARKS
	S-1	LANTANA MONTEVIDENSIS PURPLE TRAILING LANTANA	1 GAL. @ 4'-0" O.C.	201	DETAILS A, B & D, SHEET L-6.01
	S-2	ATRIPLEX CANESCENS FOUR-WING SALTBUSH	1 GAL. @ 5'-0" O.C.	151	DETAILS A, B & D, SHEET L-6.01
	S-3	BACCHARIS PILULARIS 'PIGEON POINT' COYOTE BUSH	1 GAL. @ 5'-0" O.C.	205	DETAILS A, B & D, SHEET L-6.01
	S-4	BOUGAINVILLEA 'SAN DIEGO RED' BOUGAINVILLEA VARIETY	1 GAL. @ 5'-0" O.C.	86	DETAILS A, B & D, SHEET L-6.01
	S-5	CEANOTHUS 'JULIA PHELPS' NCN	1 GAL. @ 5'-0" O.C.	185	DETAILS A, B & D, SHEET L-6.01
	S-6	MYOPORUM 'PACIFICUM' N.C.N.	1 GAL. @ 5'-0" O.C.	205	DETAILS A, B & D, SHEET L-6.01
	S-7	CEANOTHUS GRISEUS HORIZONTALIS 'YANKEE POINT' CARMEL CREEP	1 GAL. @ 4'-0" O.C.	89	DETAILS A, B & D, SHEET L-6.01
⊕	S-8	RHUS INTEGRIFOLIA LEMONADEBERRY	5 GAL. @ 6'-0" O.C.	149	DETAILS A, B & D, SHEET L-6.01
	S-9	TECOMA CAPENSIS CAPE HONEYSUCKLE	1 GAL. @ 6'-0" O.C.	154	DETAILS A, B & D, SHEET L-6.01
	S-10	ENCELIA CALIFORNICA CALIFORNIA ENCELIA	1 GAL. @ 4'-0" O.C.	244	DETAILS A, B & D, SHEET L-6.01
○	S-11	HETEROMELES ARBUTIFOLIA TOYON	5 GAL. @ 6'-0" O.C.	149	DETAILS A, B & D, SHEET L-6.01
	S-12	CEANOTHUS MARITIMUS MARITIME CEANOTHUS	1 GAL. @ 4'-0" O.C.	162+	DETAILS A, B & D, SHEET L-6.01
NO SYM.	S-13	ROSMARINUS OFFICINALIS 'PROSTRATUS' ROSEMARY	1 GAL.	SEE BELOW	DETAILS A, B & D, SHEET L-6.01
	EP-1	EXISTING PALM TREE - TYPE VARIES	VARIES	4	BOX EXISTING PALMS ON-SITE. MAINTAIN DURING CONSTRUCTION, REPLANT AS DIRECTED BY CITY'S AUTH. REP.

BID ALT #1

** SOIL NAIL PLANTER POCKETS, IRRIGATION, AND PLANTING SHALL BE BID AS SEPARATE ITEMS UNDER BID ALT#1 **

▽	PP	SOIL NAIL PLANTER POCKET **S-12 & S-13** ** ALTERNATE SHRUB TYPES ALONG LENGTH OF SOIL NAIL WALL, TYP.**	1 PER POCKET	(109) S-12 (110) S-13	DETAIL C SHEET L-6.01

HYDROSEED MIX

** AS PART OF THIS PROJECT, THE CONTRACTOR SHALL APPLY THE FOLLOWING HYDROSEED MIX TO ALL PLANTING AREAS WITHIN THE LIMITS OF WORK (PER SHEETS 37 THRU 43), INCLUDING ALL SIDEWALK, HANDRAIL, UNDERPINNING REPAIR AREAS OUTSIDE THE LIMIT OF WORK. REFER TO SPECIFICATIONS (SECTION 300-9.1) FOR JUTE NETTING/HYDROSEED APPLICATION. **

BOTANICAL NAME COMMON NAME	PURE LIVE SEED LBS./ACRE
ABRONIA MARITIMA	0.50
ACHILLEA MILLEFOLIUM	1.00
AMBROSIA CHAMISSONIS	2.00
ATRIPLEX LENTIFORMIS BREWERII	2.50
ATRIPLEX POLYCARPA	0.50
BACCHARIS PILULARIS	0.10
CAMISSONIA CHEIRANTHIFOLIA	2.00
COREOPSIS MARITIMA	0.50
ENCELIA CALIFORNICA	1.00
ERIOGONUM PARVIFOLIUM	1.00
ERIOPHYLLUM CONFERTIFLORUM	1.00
ESCHSCHOLZIA CALIFORNICA	2.50
ISOCOMA MENZIESII	1.00
LASTHENIA CALIFORNICA	0.50
LOTUS SCOPARIUS	4.00
LUPINUS SUCCULENTUS	2.50
MIMULUS AURANTIACUS LONGIFLORUS	0.20
VULPIA MICROSTACHYS	8.00

*NOTE: PLS LBS/ACRE ÷ LBS/ACRE. PLS LBS/ACRE IS THE MOST ACCURATE WAY TO SPECIFY SEEDS AND TAKES INTO ACCOUNT BOTH PURITY AND GERMINATION. PLS % = % PURITY x % GERMINATION.

FOR SLOPES STEEPER THAN 2:1, WE SUGGEST UTILIZING THE FOLLOWING HYDROSEEDING SLURRY COMPONENTS:

PRODUCT	APPLICATION RATE
FLEXTERRA FLEXIBLE GROWTH MEDIUM	3000 LBS/ACRE
HUMATE ORGANIC SOIL CONDITIONER	500 LBS/ACRE
BIOSOL MIX 7-2-3 ORGANIC FERTILIZER	800 LBS/ACRE
AM 120 MYCORRHIZAL INOCULUM	60 LBS/ACRE

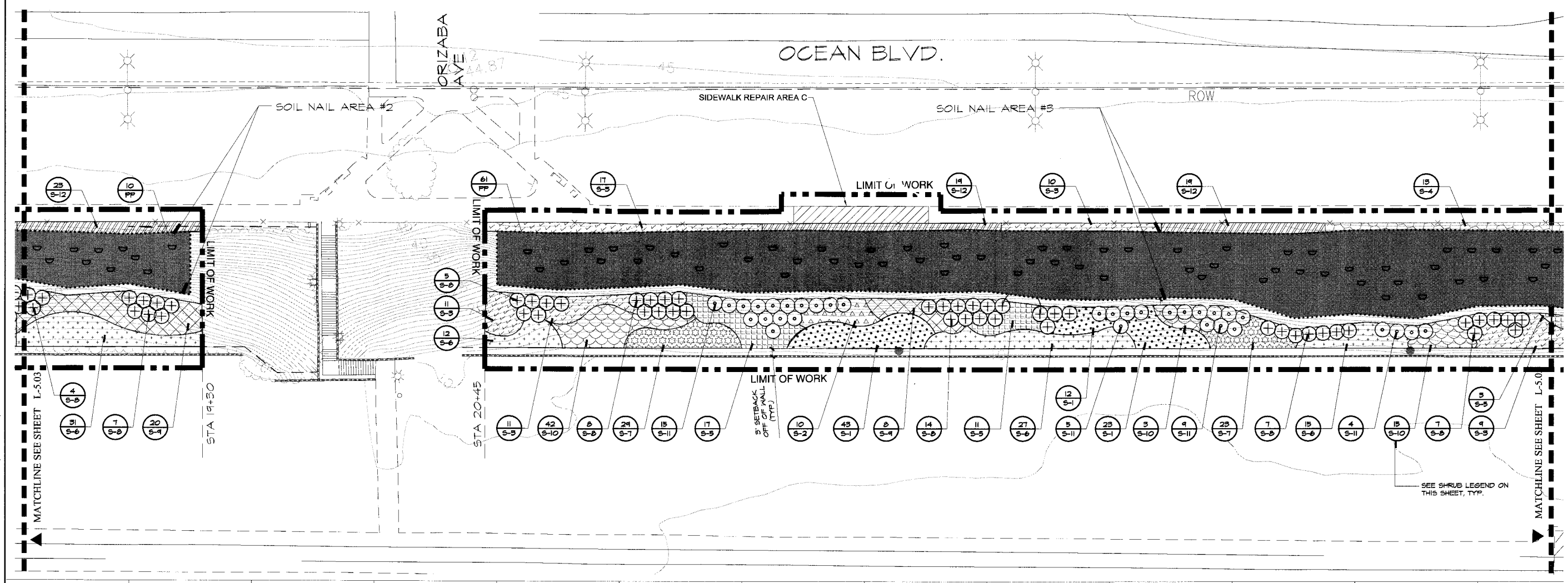

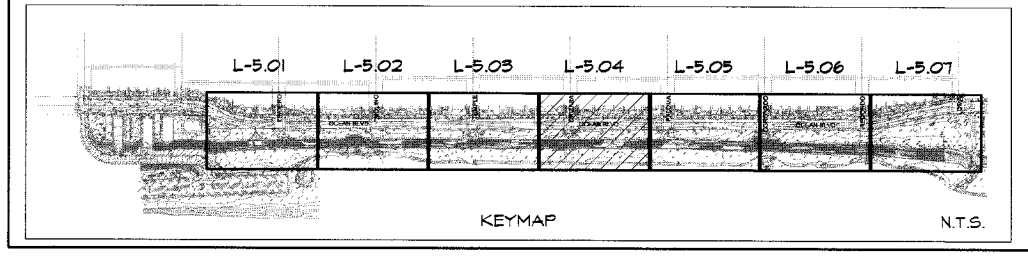

NOTE:
CONTRACTOR SHALL BE RESPONSIBLE TO REPAIR OR REPLACE ANY DAMAGED EXISTING IMPROVEMENTS DESIGNATED TO BE PROTECTED-IN-PLACE AND/OR IMPROVEMENTS LOCATED OUTSIDE THE LIMITS-OF-WORK. CONTRACTOR SHALL PHOTOGRAPH AND RECORD WITH THE CITY THE CONDITION OF THE SITE PRIOR TO COMMENCEMENT OF THE WORK. THIS INCLUDES PROPOSED STAGING AREAS AND CONSTRUCTION ACCESS ROUTES.

0 20 40
Scale: 1" = 20'

100% DESIGN SUBMITTAL

31591 Camino Capistrano
San Juan Capistrano, CA 92675
www.RJMdesigngroup.com
(949) 493-2890 fax
(949) 493-2800 phone

RJM DESIGN GROUP

L-5.04

REVISIONS

No.	DATE	SHEET	APPROVAL	DESCRIPTION

AS-BUILT

REF. DWG. X-XXXX
DWG. X-XXXX

DESIGNED BY: L.M.
DRAWN BY: M.L.
DESIGN CHECK BY:
DRAFTING CHECK BY:

LICENSED LANDSCAPE ARCHITECT ☆ LARRY MINDEL ☆ LICENSE NO. 2152 ☆ STATE OF CALIFORNIA

OCEAN BOULEVARD EROSION AND ENHANCEMENT PROJECT, PHASE 2
PLANTING PLAN

GRAPHIC SCALE

PAGE

FIELD BOOK

NO. R- 6959

JOB NO. PW8260-13

SHEET 40 OF 44

DRAWING NO. B-4562

LAST SAVED BY: michael
PLOT DATE: Oct. 18, 12
SAVED PATH: P:\888\888-01-Ocean Blvd. Bluffs Phase 2\888-01_CD\888-01-1st-Subm

SHRUB LEGEND

		BOTANICAL NAME COMMON NAME	SIZE/ SPACING	TOTAL QTY.	REMARKS
	S-1	LANTANA MONTEVIDENSIS PURPLE TRAILING LANTANA	1 GAL. @ 4'-0" O.C.	201	DETAILS A, B & D, SHEET L-6.01
	S-2	ATRIPLEX CANESCENS FOUR-WING SALTBUSH	1 GAL. @ 5'-0" O.C.	131	DETAILS A, B & D, SHEET L-6.01
	S-3	BACCHARIS PILULARIS 'PIGEON POINT' COYOTE BUSH	1 GAL. @ 5'-0" O.C.	205	DETAILS A, B & D, SHEET L-6.01
	S-4	BOUGAINVILLEA 'SAN DIEGO RED' BOUGAINVILLEA VARIETY	1 GAL. @ 5'-0" O.C.	86	DETAILS A, B & D, SHEET L-6.01
	S-5	CEANOTHUS 'JULIA PHELPS' NCN	1 GAL. @ 5'-0" O.C.	185	DETAILS A, B & D, SHEET L-6.01
	S-6	MYOPORUM 'PACIFICUM' N.C.N.	1 GAL. @ 5'-0" O.C.	205	DETAILS A, B & D, SHEET L-6.01
	S-7	CEANOTHUS GRISEUS HORIZONTALIS 'YANKEE POINT' CARMEL CREEP	1 GAL. @ 4'-0" O.C.	89	DETAILS A, B & D, SHEET L-6.01
	S-8	RHUS INTEGRIFOLIA LEMONADEBERRY	5 GAL. @ 6'-0" O.C.	149	DETAILS A, B & D, SHEET L-6.01
	S-9	TECOMA CAPENSIS CAPE HONEYSUCKLE	1 GAL. @ 6'-0" O.C.	134	DETAILS A, B & D, SHEET L-6.01
	S-10	ENCELIA CALIFORNICA CALIFORNIA ENCELIA	1 GAL. @ 4'-0" O.C.	244	DETAILS A, B & D, SHEET L-6.01
	S-11	HETEROMELES ARBUTIFOLIA TOYON	5 GAL. @ 6'-0" O.C.	149	DETAILS A, B & D, SHEET L-6.01
	S-12	CEANOTHUS MARITIMUS MARITIME CEANOTHUS	1 GAL. @ 4'-0" O.C.	162+	DETAILS A, B & D, SHEET L-6.01
	NO SYM.	ROSMARINUS OFFICINALIS 'PROSTRATUS' ROSEMARY	1 GAL.	SEE BELOW	DETAILS A, B & D, SHEET L-6.01
	EP-1	EXISTING PALM TREE - TYPE VARIES	VARIES	4	BOX EXISTING PALMS ON-SITE. MAINTAIN DURING CONSTRUCTION, REPLANT AS DIRECTED BY CITY'S AUTH. REP.

BID ALT #1

** SOIL NAIL PLANTER POCKETS, IRRIGATION, AND PLANTING SHALL BE BID AS SEPARATE ITEMS UNDER BID ALT#1 **

	PP	SOIL NAIL PLANTER POCKET **S-12 & S-15** ** ALTERNATE SHRUB TYPES ALONG LENGTH OF SOIL NAIL WALL, TYP.**	1 PER POCKET	(109) S-12 (110) S-15	DETAIL C SHEET L-6.01

HYDROSEED MIX

** AS PART OF THIS PROJECT, THE CONTRACTOR SHALL APPLY THE FOLLOWING HYDROSEED MIX TO ALL PLANTING AREAS WITHIN THE LIMITS OF WORK (PER SHEETS 31 THRU 43), INCLUDING ALL SIDEWALK, HANDRAIL, UNDERPINNING REPAIR AREAS OUTSIDE THE LIMIT OF WORK. REFER TO SPECIFICATIONS (SECTION 300-9.1) FOR JUTE NETTING/HYDROSEED APPLICATION. **

BOTANICAL NAME COMMON NAME	PURE LIVE SEED LBS/ACRE
ABRONIA MARITIMA	0.50
ACHILLEA MILLEFOLIUM	1.00
AMBROSIA CHAMISSONIS	2.00
ATRIPLEX LENTIFORMIS BREWERII	2.50
ATRIPLEX POLYCARPA	0.50
BACCHARIS PILULARIS	0.10
CAMISSONIA CHEIRANTHIFOLIA	2.00
COREOPSIS MARITIMA	0.50
ENCELIA CALIFORNICA	1.00
ERIOSONUM PARVIFOLIUM	1.00
ERIOPHYLLUM CONFERTIFLORUM	1.00
ESCHSCHOLZIA CALIFORNICA	2.50
ISOCOMA MENZIESII	1.00
LASTHENIA CALIFORNICA	0.50
LOTUS SCOPARIUS	4.00
LUPINUS SUCCULENTUS	2.50
MIMULUS AURANTIACUS LONGIFLORUS	0.20
VULPIA MICROSTACHYS	8.00

*NOTE: PLS LBS/ACRE = LBS/ACRE. PLS LBS/ACRE IS THE MOST ACCURATE WAY TO SPECIFY SEEDS AND TAKES INTO ACCOUNT BOTH PURITY AND GERMINATION. PLS % = % PURITY x % GERMINATION.

FOR SLOPES STEEPER THAN 2:1, WE SUGGEST UTILIZING THE FOLLOWING HYDROSEEDING SLURRY COMPONENTS.

PRODUCT	APPLICATION RATE
FLEXTERRA FLEXIBLE GROWTH MEDIUM	3000 LBS/ACRE
HUMATE ORGANIC SOIL CONDITIONER	500 LBS/ACRE
BIOSOL MIX 7-2-3 ORGANIC FERTILIZER	800 LBS/ACRE
AM 120 MYCORRHIZAL INOCULUM	60 LBS/ACRE

##/S-X — ## = SHRUB QUANTITY, SEE LEGEND; S-X = SHRUB TYPE, SEE LEGEND

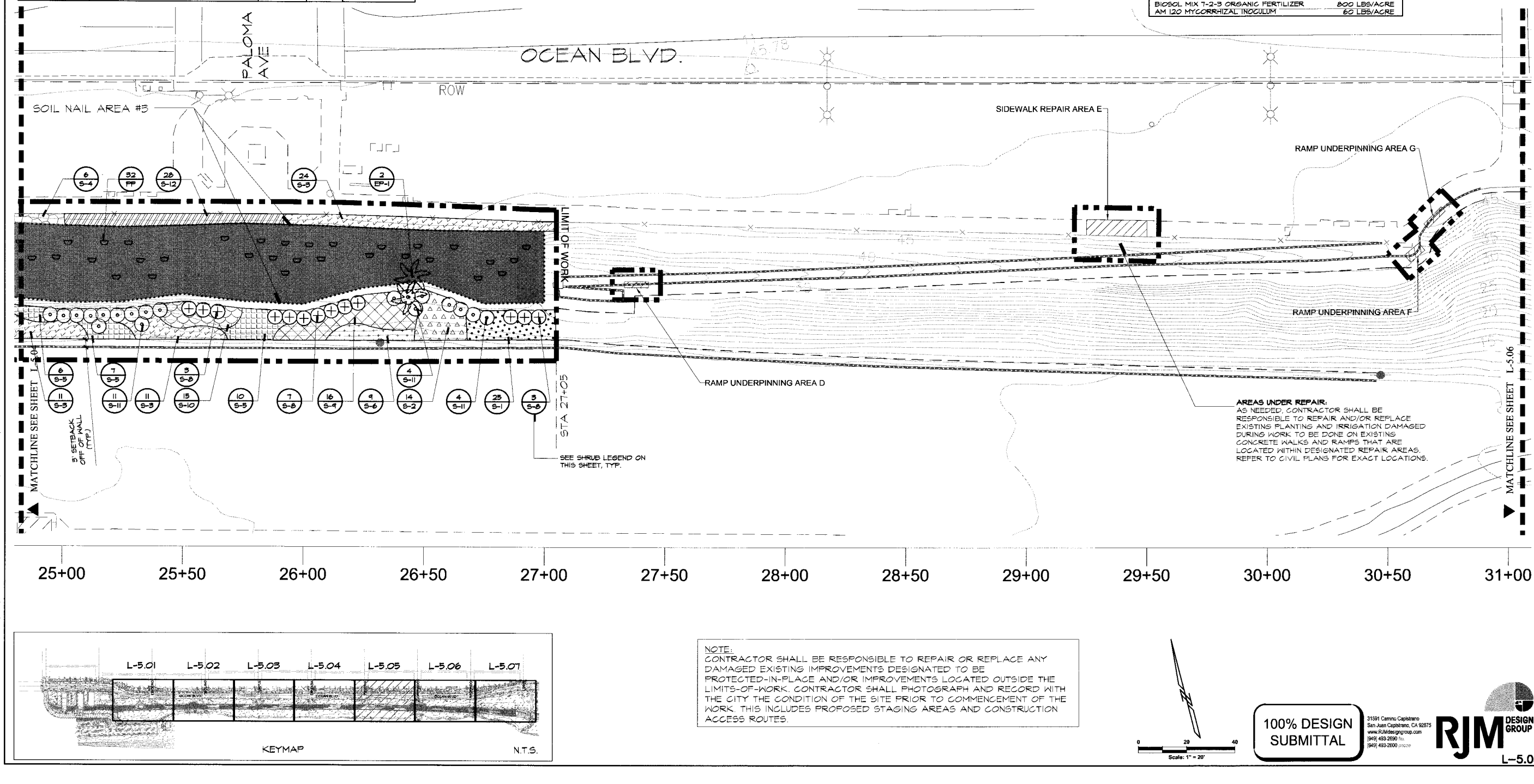

NOTE:
CONTRACTOR SHALL BE RESPONSIBLE TO REPAIR OR REPLACE ANY DAMAGED EXISTING IMPROVEMENTS DESIGNATED TO BE PROTECTED-IN-PLACE AND/OR IMPROVEMENTS LOCATED OUTSIDE THE LIMITS-OF-WORK. CONTRACTOR SHALL PHOTOGRAPH AND RECORD WITH THE CITY THE CONDITION OF THE SITE PRIOR TO COMMENCEMENT OF THE WORK. THIS INCLUDES PROPOSED STAGING AREAS AND CONSTRUCTION ACCESS ROUTES.

0 20 40
Scale: 1" = 20'

100% DESIGN SUBMITTAL

RJM DESIGN GROUP
31591 Camino Capistrano
San Juan Capistrano, CA 92675
www.RJMdesigngroup.com
(949) 493-2690 fax
(949) 493-2600 phone

L-5.05

REVISIONS

No.	DATE	SHEET	APPROVAL	DESCRIPTION

AS-BUILT:

REF. DWG. X-XXXX DWG. X-XXXX

DESIGNED BY: L.M.
DRAWN BY: M.L.
DESIGN CHECK BY:
DRAFTING CHECK BY:

LANDSCAPE ARCHITECT ☆ LICENSED ☆ LARRY MILLER LICENSE NO. 2152 ☆ STATE OF CALIFORNIA
EXPIRATION DATE 08/31/2014

OCEAN BOULEVARD EROSION AND ENHANCEMENT PROJECT, PHASE 2 PLANTING PLAN

GRAPHIC SCALE

PAGE

FIELD BOOK

NO. R- 6959

JOB NO. PW8260-13

SHEET 41 OF 44

DRAWING NO. B-4562

LAST SAVED BY: michael
PLOT DATE: Oct. 18, 12
SAVED PATH: P:\888\888-01-Ocean Blvd. Bluffs, Phase 2\888-01_CD\888-01-1st-Subm

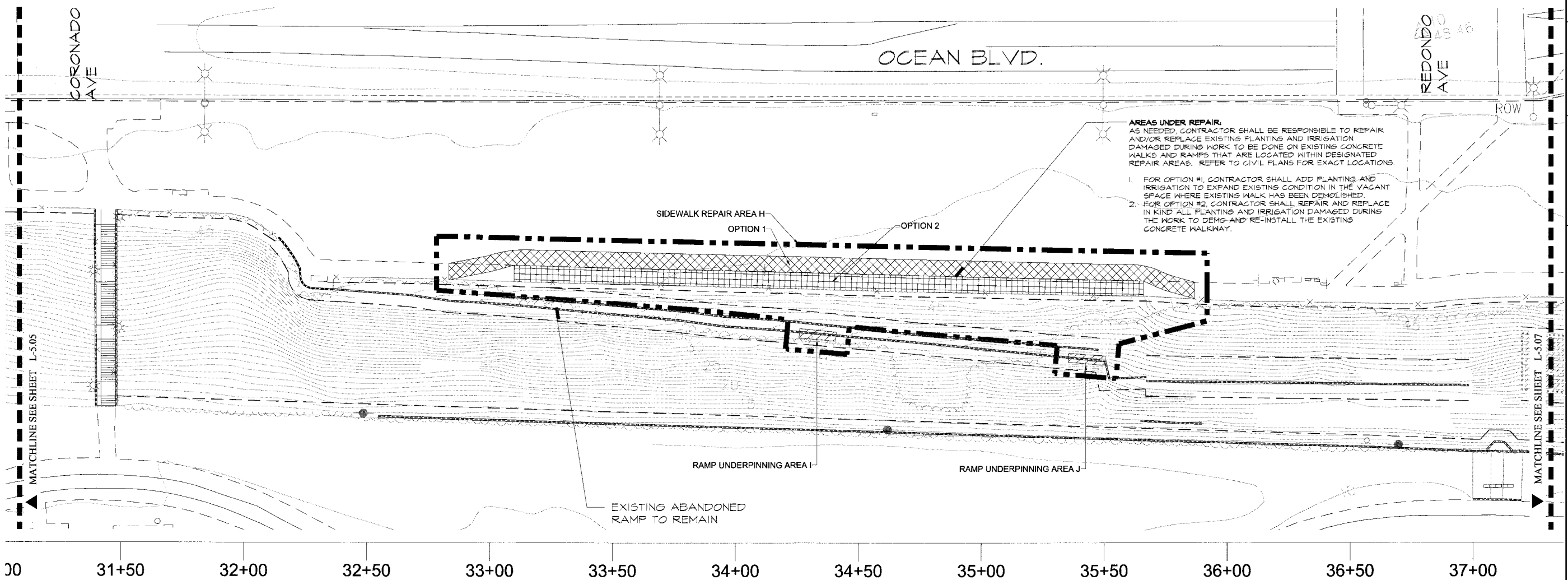

AREAS UNDER REPAIR:
AS NEEDED, CONTRACTOR SHALL BE RESPONSIBLE TO REPAIR AND/OR REPLACE EXISTING PLANTING AND IRRIGATION DAMAGED DURING WORK TO BE DONE ON EXISTING CONCRETE WALKS AND RAMPS THAT ARE LOCATED WITHIN DESIGNATED REPAIR AREAS. REFER TO CIVIL PLANS FOR EXACT LOCATIONS.

1. FOR OPTION #1, CONTRACTOR SHALL ADD PLANTING AND IRRIGATION TO EXPAND EXISTING CONDITION IN THE VACANT SPACE WHERE EXISTING WALK HAS BEEN DEMOLISHED.
2. FOR OPTION #2, CONTRACTOR SHALL REPAIR AND REPLACE IN KIND ALL PLANTING AND IRRIGATION DAMAGED DURING THE WORK TO DEMO AND RE-INSTALL THE EXISTING CONCRETE WALKWAY.

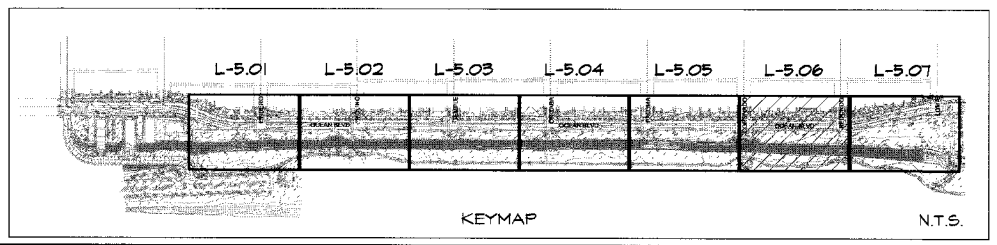

NOTE:
CONTRACTOR SHALL BE RESPONSIBLE TO REPAIR OR REPLACE ANY DAMAGED EXISTING IMPROVEMENTS DESIGNATED TO BE PROTECTED-IN-PLACE AND/OR IMPROVEMENTS LOCATED OUTSIDE THE LIMITS-OF-WORK. CONTRACTOR SHALL PHOTOGRAPH AND RECORD WITH THE CITY THE CONDITION OF THE SITE PRIOR TO COMMENCEMENT OF THE WORK. THIS INCLUDES PROPOSED STAGING AREAS AND CONSTRUCTION ACCESS ROUTES.

0 20 40
Scale: 1" = 20'

100% DESIGN SUBMITTAL

31591 Camino Capistrano
San Juan Capistrano, CA 92675
www.RJMdesigngroup.com
(949) 493-2690 fax
(949) 493-2600 phone

RJM DESIGN GROUP

L-5.06

REVISIONS

No.	DATE	SHEET	APPROVAL	DESCRIPTION

AS-BUILT:

REF: DWG. X-XXXX DWG. X-XXXX
DWG. X-XXXX

DESIGNED BY: L.M.
DRAWN BY: M.L.
DESIGN CHECK BY:
DRAFTING CHECK BY:

LICENSED LANDSCAPE ARCHITECT ☆ STATE OF CALIFORNIA
LARRY D. MOURI LICENSE NO. 2152
Signature
Date
10/15/2012
Date

OCEAN BOULEVARD EROSION AND ENHANCEMENT PROJECT, PHASE 2
PLANTING PLAN (FOR REFERENCE ONLY)

GRAPHIC SCALE 0 1 2 3
PAGE
FIELD BOOK

NO. R- 6959
JOB NO. PW8260-13
SHEET 42 OF 44
DRAWING NO. B-4562

LAST SAVED BY: michael
PLOT DATE: Oct. 18, 12
SAVED PATH: P:\888\888-01-Ocean Blvd. Bluffs Phase 2\888-01_CD\888-01-1st-Subm

SHEET INSERTED FOR REFERENCE ONLY

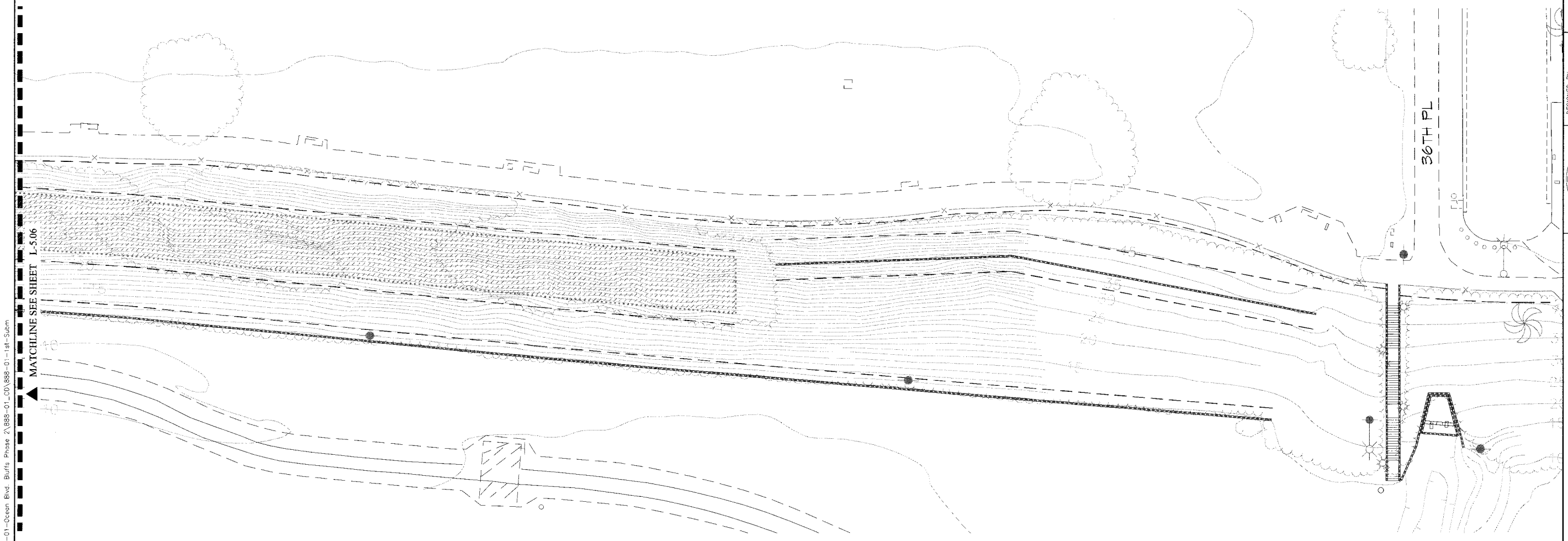

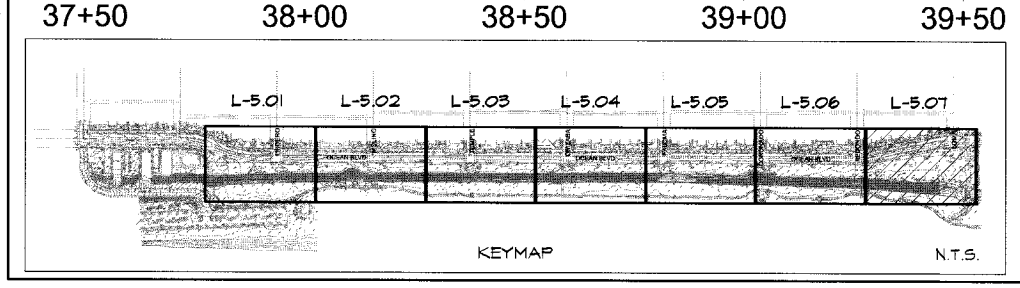

NOTE:
CONTRACTOR SHALL BE RESPONSIBLE TO REPAIR OR REPLACE ANY DAMAGED EXISTING IMPROVEMENTS DESIGNATED TO BE PROTECTED-IN-PLACE AND/OR IMPROVEMENTS LOCATED OUTSIDE THE LIMITS-OF-WORK. CONTRACTOR SHALL PHOTOGRAPH AND RECORD WITH THE CITY THE CONDITION OF THE SITE PRIOR TO COMMENCEMENT OF THE WORK. THIS INCLUDES PROPOSED STAGING AREAS AND CONSTRUCTION ACCESS ROUTES.

0 20 40
Scale: 1" = 20'

100% DESIGN SUBMITTAL

31591 Camino Capistrano
San Juan Capistrano, CA 92675
www.RJMdesigngroup.com
(949) 493-2690 fax
(949) 493-2600 phone

RJM DESIGN GROUP

L-5.07

REVISIONS

No.	DATE	SHEET	APPROVAL	DESCRIPTION

DESIGNED BY: L.M.
DRAWN BY: M.L.
DESIGN CHECK BY:
DRAFTING CHECK BY:
AS-BUILT:
REF: DWG. X-XXXX DWG. X-XXXX DWG. X-XXXX

LICENSED LANDSCAPE ARCHITECT ☆ STATE OF CALIFORNIA ☆ LARRY D. MOUNT LICENSE NO. 2452 Registered Professional Engineer 10/18/2012

OCEAN BOULEVARD EROSION AND ENHANCEMENT PROJECT, PHASE 2
PLANTING PLAN (FOR REFERENCE ONLY)

GRAPHIC SCALE 0 1 2 3
PAGE
FIELD BOOK

NO. R- 6959
JOB NO. PW8260-13
SHEET 43 OF 44
DRAWING NO. B-4562

LAST SAVED BY: michael
PLOT DATE: Oct. 18, 12
SAVED PATH: P:\888\888-01-Ocean Blvd. Bluffs Phase 2\888-01_CD\888-01-1st-Subm

GENERAL PLANTING NOTES

1. ALL LANDSCAPED AREAS TO RECEIVE AUTOMATED IRRIGATION.
2. REFER TO PLANTING SPECIFICATIONS FOR SOIL PREPARATION, FERTILIZATION, MULCHING, AND OTHER ADDITIONAL PLANTING INFORMATION.
3. ALL PLANT MATERIAL SHALL BE APPROVED BY THE CITY PRIOR TO INSTALLATION.
4. FINAL LOCATION OF ALL PLANT MATERIALS SHALL BE SUBJECT TO THE APPROVAL OF THE CITY.
5. CONTRACTOR SHALL NOTIFY CITY 48 HOURS PRIOR TO COMMENCEMENT OF WORK TO COORDINATE PROJECT INSPECTION SCHEDULES.
6. SEE DETAILS AND SPECIFICATIONS FOR PLANT PIT DIMENSIONS (DETAIL 'A' & 'B', THIS SHEET) AND BACKFILL REQUIREMENTS (SECTION 308-4.5).
7. IF CONFLICTS ARISE BETWEEN SIZE OF AREAS AND PLANS, CONTRACTOR TO CONTACT CITY FOR RESOLUTION. FAILURE TO MAKE SUCH CONFLICTS KNOWN TO THE LANDSCAPE ARCHITECT WILL RESULT IN CONTRACTOR'S LIABILITY TO RELOCATE THE MATERIALS.
8. IT IS THE CONTRACTOR'S RESPONSIBILITY TO FURNISH PLANT MATERIALS FREE OF PESTS OR PLANT DISEASES. 'PRE-SELECTED OR 'TAGGED' MATERIAL MUST BE INSPECTED BY THE CONTRACTOR AND CERTIFIED PEST AND DISEASE FREE. IT IS THE CONTRACTOR'S OBLIGATION TO WARRANTY ALL PLANT MATERIALS PER THE SPECIFICATIONS (SECTION 308-7).
9. CONTRACTOR SHALL BE RESPONSIBLE FOR MAKING HIMSELF FAMILIAR WITH ALL UNDERGROUND UTILITIES, PIPELINES AND STRUCTURES. CONTRACTOR SHALL TAKE SOLE RESPONSIBILITY FOR ANY COST INCURRED DUE TO DAMAGE OF SAID UTILITIES.
10. CONTRACTOR SHALL NOT WILLFULLY PROCEED WITH CONSTRUCTION AS DESIGNED WHEN IT IS OBVIOUS THAT UNKNOWN OBSTRUCTIONS AND/OR GRADE DIFFERENCES EXIST THAT MAY NOT HAVE BEEN KNOWN DURING DESIGN. SUCH CONDITIONS SHALL BE IMMEDIATELY BROUGHT TO THE ATTENTION OF THE CITY. THE CONTRACTOR SHALL ASSUME FULL RESPONSIBILITY FOR ALL NECESSARY REVISIONS DUE TO FAILURE TO GIVE SUCH NOTIFICATION.
11. CONTRACTOR SHALL BE RESPONSIBLE FOR ANY COORDINATION WITH SUBCONTRACTORS AS REQUIRED TO ACCOMPLISH PLANTING OPERATIONS.
12. PLANT MATERIAL QUANTITIES ARE GIVEN FOR CONVENIENCE ONLY. PLANT SYMBOLS AND SPECIFIED SPACING SHALL TAKE PRECEDENCE. CONTRACTOR SHALL VERIFY PLANT MATERIAL QUANTITIES PER PLAN.
13. CONTRACTOR TO ASSURE POSITIVE DRAINAGE IN ALL PLANTING AREAS - 2% MINIMUM ALLOWED.
14. CONTRACTOR SHALL HAVE SOIL SAMPLES TAKEN AT THE LOCATIONS INDICATED BY DESIGNATION. THESE SAMPLES SHALL BE TESTED BY SOIL AND PLANT LAB (714)558-8333 FOR SOIL FERTILITY, AGRICULTURAL SUITABILITY TEST AND SOIL PREPARATION RECOMMENDATIONS. TWO SAMPLES SHALL BE TAKEN AT EACH LOCATION: (1) GROUND LEVEL TO 10" DEEP, (2) 24" TO 36" DEEP. EACH SAMPLE SHALL CONTAIN APPROXIMATELY 1 QUART OF SOIL AND BE LABELED PER LOCATION AND DEPTH. CONTRACTOR SHALL INSTALL SOIL PREPARATION AND BACKFILL MIX TO CONFORM TO THE SOIL RECOMMENDATIONS AS NOTED IN THE SOILS REPORT.
15. GROUND COVERS AND SHRUBS SHALL BE TRIANGULARLY SPACED, UNLESS OTHERWISE INDICATED.
16. ALL SOIL FOR LANDSCAPE PLANTING AREAS OR BERMS SHALL BE OBTAINED FROM ON- SITE EXCAVATIONS. SHOULD IMPORT SOIL BE NECESSARY, INDICATE SOURCE LOCATION. SOIL SHALL BE SANDY LOAM CONTAINING NO TOXIC CHEMICALS OR ELEMENTS WHICH MAY INHIBIT OR RETARD NORMAL PLANT GROWTH. SOIL TESTING RESULTS SHALL BE SUBMITTED AND APPROVED PRIOR TO SOIL IMPLEMENTATION. TWO SAMPLES SHALL BE TAKEN AT EACH LOCATION: (1) GROUND LEVEL TO 10" DEEP, (2) 24" TO 36" DEEP. EACH SAMPLE SHALL CONTAIN APPROXIMATELY 1 QUART OF SOIL AND BE LABELED PER LOCATION AND DEPTH. CONTRACTOR SHALL INSTALL SOIL PREPARATION AND BACKFILL MIX TO CONFORM TO THE SOIL RECOMMENDATIONS AS NOTED IN THE SOILS REPORT. SOIL TESTING RESULTS SHALL BE SUBMITTED TO THE CITY AND APPROVED BY THE CITY PRIOR TO PLANTS INSTALLATION.
17. AT EDGES OF PLANTING AREAS, THE CENTER LINE OF THE LAST ROW OF SHRUBS AND/OR GROUND COVER SHALL BE LOCATED NO FARTHER FROM OR CLOSER TO THE EDGE THAN ONE-HALF THE SPECIFIED ON-CENTER SPACING.
18. NO PLANTING WITHIN 18" OF IRRIGATION HEADS.
19. CONTRACTOR SHALL INSTALL HYDROSEED NURSE CROP MIX (PER SHEETS 37 THRU 43) ON ALL DISTURBED SLOPES, WHETHER DUE TO GRADING AND REPAIR ACTIVITIES, DEMOLITION, AND/OR REMOVAL/REPLACEMENT OF EXISTING PLANT MATERIALS. CITY REPRESENTATIVES (I.E. PARK, RECREATION AND MARINE, AND ENGINEER AT A MINIMUM) SHALL BE PRESENT DURING THE HYDROSEED MIX INSTALLATION. FAILURE TO SUBMIT PROOF OF THIS INSTALLATION WILL REQUIRE THE CONTRACTOR TO RE-INSTALL HYDROSEED MIX AT NO ADDITIONAL COST TO THE CITY.
20. THE CONTRACTOR SHALL BE RESPONSIBLE FOR ALL HYDROSEEDED AREAS FOR AS LONG AFTER SEEDING AS NECESSARY UNTIL AN ACCEPTABLE STAND OF HYDROSEED MATERIAL IS REALIZED AND APPROVED BY THE ENGINEER. (95% COVERAGE MINIUM)

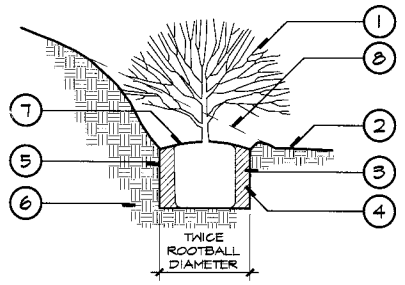

LEGEND:

1. SHRUB - CENTER IN PIT.
2. FINISH GRADE
3. AMMENDED BACKFILL - REFER TO SPECIFICATIONS, SECTION 308-4.5
4. PLANTING TABLETS - REFER TO SPECIFICATIONS, SECTION 212-1.2.3 FOR QUANTITY AND PLACEMENT
5. SCARIFY SIDES AND BOTTOM OF PLANTING PIT.
6. NATIVE UNDISTURBED SOIL.
7. SET TOP OF ROOTBALL 2" ABOVE SURROUNDING GRADE AND SLOPE FOR DRAINAGE.
8. FINISH GRADE BEYOND

SHRUB PLANTING (SLOPE) | B

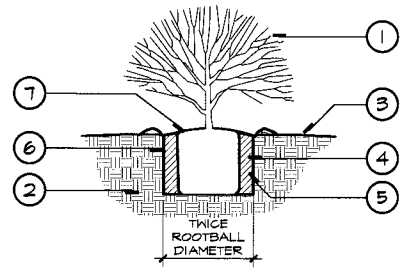

LEGEND:

1. SHRUB - CENTER IN PIT.
2. NATIVE UNDISTURBED SOIL.
3. FINISH GRADE
4. AMMENDED BACKFILL - REFER TO SPECIFICATIONS, SECTION 308-4.5
5. PLANTING TABLETS - REFER TO SPECIFICATIONS, SECTION 212-1.2.3 FOR QUANTITY AND PLACEMENT
6. SCARIFY SIDES AND BOTTOM OF PLANTING PIT.
7. SET TOP OF ROOTBALL 2" ABOVE SURROUNDING GRADE AND SLOPE FOR DRAINAGE.

SHRUB PLANTING DETAIL | A

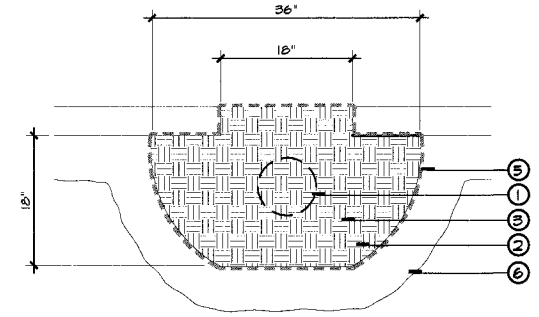

TYPICAL PLANT POCKET: PLAN VIEW

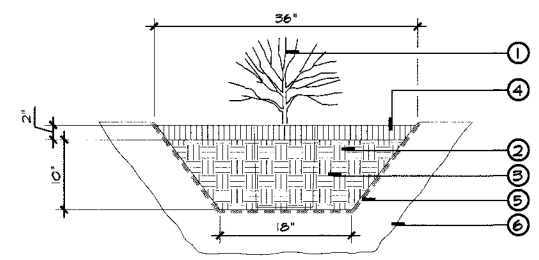

TYPICAL PLANT POCKET: ELEVATION

LEGEND:

1. SHRUB PER PLAN - CENTER IN POCKET
2. AMMENDED BACKFILL - REFER TO SPECIFICATIONS, SECTION 308-4.5
3. PLANTING TABLETS - REFER TO SPECIFICATIONS, SECTION 212-1.2.3 FOR QUANTITY AND PLACEMENT
4. 2" DARK HARDWOOD MULCH
5. MIRAFI 500X GEOTEXTILE OR APPROVED EQUAL
6. PLANTER POCKET PER PLAN

*** THIS DETAIL IS DIAGRAMMATIC AND FOR DESIGN INTENT ONLY. CONTRACTOR SHALL SUBMIT DETAILED SECTIONS OF PLANTER POCKETS DURING THE SHOP DRAWING PROCESS, WITH PROPOSED ENGINEERING, WATERPROOFING, IRRIGATION, AND DRAINAGE SHOWN FOR REVIEW AND APPROVAL. ***

PLANTER POCKET DETAIL | C

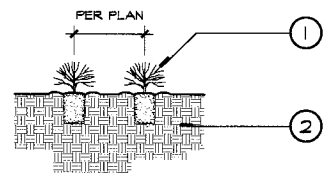

SECTION

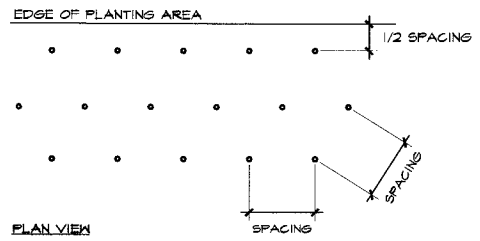

PLAN VIEW

LEGEND:

1. GROUNDCOVER FROM FLAT, CUTTING, LINER, OR ONE GALLON CONTAINER
2. NATIVE UNDISTURBED SOIL.

GROUNDCOVER SPACING DETAIL | D

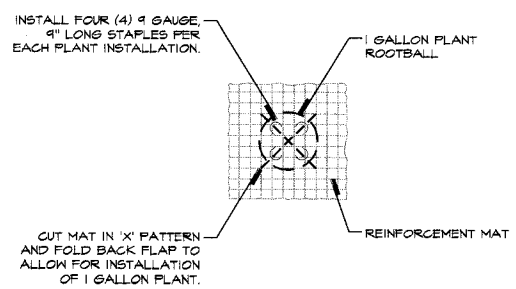

PLANTING @ REINFORCEMENT MAT | E

REVISIONS

No.	DATE	SHEET	APPROVAL	DESCRIPTION

REF: DWG. X-XXXX DWG. X-XXXX
DWG. X-XXXX

AS-BUILT:

DESIGNED BY: L.M.
DRAWN BY: M.L.
DESIGN CHECK BY:
DRAFTING CHECK BY:

LICENSED LANDSCAPE ARCHITECT ☆ LARRY J. MOSER, LICENSE NO. 2152 ☆ STATE OF CALIFORNIA

OCEAN BOULEVARD EROSION AND ENHANCEMENT PROJECT, PHASE 2
PLANTING DETAILS & NOTES

GRAPHIC SCALE: 0 1 2 3

FIELD BOOK | PHASE

NO. R- 6989

JOB NO. PW8260-13

SHEET 44 OF 44

DRAWING NO. B-4562

100% DESIGN SUBMITTAL

31591 Camino Capistrano
San Juan Capistrano, CA 92675
www.RJMdesigngroup.com
(949) 493-2690 fax
(949) 493-2600 phone

RJM DESIGN GROUP

L-6.01

LAST SAVED BY: michael
PLOT DATE: Oct. 18, 12
SAVED PATH: P:\8808\888-01-Ocean Blvd Bluffs Phase 2\888-01_CD\888-01-1st-Subm